# CDX-GT06/CXS-GT06HP

# SERVICE MANUAL

*US Model*

**Ver. 1.0 2006.07**

• CXS-GT06HP is composed of CDX-GT06, 2 way speaker, 3 way speaker.

(Photo: CDX-GT06)

• The tuner and CD sections have no adjustments.

| | |
|---|---|
| Model Name Using Similar Mechanism | CDX-GT10W/GT100 |
| CD Drive Mechanism Type | MG-611XE-186//C |
| Optical Pick-up Name | KSS1000E |

**AUDIO POWER SPECIFICATIONS**

POWER OUTPUT AND TOTAL HARMONIC DISTORTION
22 watts per channel minimum continuous average power into 4 ohms, 4 channels driven from 20 Hz to 20 kHz with no more than 5% total harmonic distortion.

## SPECIFICATIONS

**CD Player section**

| | |
|---|---|
| Signal-to-noise ratio: | 120 dB |
| Frequency response: | 10 – 20,000 Hz |
| Wow and flutter: | Below measurable limit |

**Tuner section**

**FM**

| | |
|---|---|
| Tuning range: | 87.5 – 107.9 MHz |
| Antenna terminal: | External antenna connector |
| Intermediate frequency: | 10.7 MHz/450 kHz |
| Usable sensitivity: | 9 dBf |
| Selectivity: | 75 dB at 400 kHz |
| Signal-to-noise ratio: | 67 dB (stereo), 69 dB (mono) |
| Harmonic distortion at 1 kHz: | 0.5 % (stereo), 0.3 % (mono) |
| Separation: | 35 dB at 1 kHz |
| Frequency response: | 30 – 15,000 Hz |

**AM**

| | |
|---|---|
| Tuning range: | 530 – 1,710 kHz |
| Antenna terminal: | External antenna connector |
| Intermediate frequency: | 10.7 MHz/450 kHz |
| Sensitivity: | 30 µV |

**Power amplifier section**

| | |
|---|---|
| Outputs: | Speaker outputs (sure seal connectors) |
| Speaker impedance: | 4 – 8 ohms |
| Maximum power output: | 45 W × 4 (at 4 ohms) |

**General**

| | |
|---|---|
| Outputs: | Audio outputs terminal (sub/rear switchable)<br>Power antenna relay control terminal<br>Power amplifier control terminal |
| Inputs: | Antenna input terminal<br>AUX input jack (stereo mini jack) |
| Tone controls: | Low: ±10 dB at 60 Hz (XPLOD)<br>Mid: ±10 dB at 1 kHz (XPLOD)<br>High: ±10 dB at 10 kHz (XPLOD) |
| Power requirements: | 12 V DC car battery (negative ground) |
| Dimensions: | Approx. 178 × 50 × 179 mm<br>(7 1/8 × 2 × 7 1/8 in) (w/h/d) |
| Mounting dimensions: | Approx. 182 × 53 × 161 mm<br>(7 1/4 × 2 1/8 × 6 3/8 in) (w/h/d) |
| Mass: | Approx. 1.2 kg (2 lb 11 oz) |
| Supplied accessories: | Parts for installation and connections (1 set) |

– Continued on next page –

## FM/AM COMPACT DISC PLAYER

**9-887-357-01**
2006G04-1
© 2006.07

**Sony Corporation**
**eVehicle Division**
**Published by Sony Techno Create Corporation**

SONY®

**6 × 9 Speaker (3-way Speaker)**

| | |
|---|---|
| Speaker | Coaxial 3-way:<br>Woofer 16 × 24 cm<br>(6 3/8 × 9 1/2 in), cone type<br>Midrange 5.5 cm (2 1/4 in), cone type<br>Tweeter 1.4 cm (9/16 in), balanced dome type |
| Peak power | 300 W |
| Rated power | 60 W |
| Impedance | 4 Ω |
| Sensitivity | 93 dB/W/m |
| Frequency response | 27 – 30,000 Hz |
| Mass | Approx. 1,150 g (2 lb 9 oz) per speaker |
| Supplied accessory | Parts for installation |

**6 1/2 Speaker (2-way Speaker)**

| | |
|---|---|
| Speaker | Coaxial 2-way:<br>Woofer 16 cm (6 3/8 in), HOP, cone type<br>Tweeter 4 cm (1 5/8 in), Al, cone type |
| Peak power | 190 W |
| Rated power | 40 W |
| Impedance | 4 Ω |
| Sensitivity | 90 dB/W/m |
| Frequency response | 35 – 22,000 Hz |
| Mass | Approx. 560 g (1 lb 4 oz) per speaker |
| Supplied accessory | Parts for installation |

*Design and specifications are subject to change without notice.*

**Dimensions**
**Dimensiones**

Unit: mm (in)
Unidad: mm

**6 × 9 Speaker**
**Altavoz de 6 × 9**

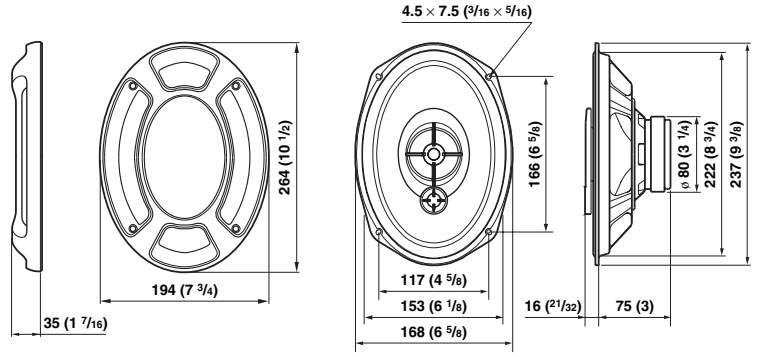


**6 1/2 Speaker**
**Altavoz de 6 1/2**

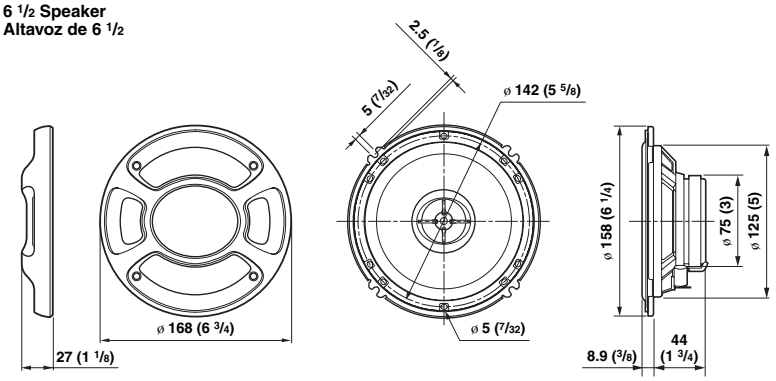


**SAFETY-RELATED COMPONENT WARNING!!**

**COMPONENTS IDENTIFIED BY MARK ⚠ OR DOTTED LINE WITH MARK ⚠ ON THE SCHEMATIC DIAGRAMS AND IN THE PARTS LIST ARE CRITICAL TO SAFE OPERATION. REPLACE THESE COMPONENTS WITH SONY PARTS WHOSE PART NUMBERS APPEAR AS SHOWN IN THIS MANUAL OR IN SUPPLEMENTS PUBLISHED BY SONY.**

## SERVICE NOTES

### CAUTION

Use of controls or adjustments or performance of procedures other than those specified herein may result in hazardous radiation exposure.

### NOTES ON HANDLING THE OPTICAL PICK-UP BLOCK OR BASE UNIT

The laser diode in the optical pick-up block may suffer electrostatic breakdown because of the potential difference generated by the charged electrostatic load, etc. on clothing and the human body.
During repair, pay attention to electrostatic breakdown and also use the procedure in the printed matter which is included in the repair parts.
The flexible board is easily damaged and should be handled with care.

### NOTES ON LASER DIODE EMISSION CHECK

The laser beam on this model is concentrated so as to be focused on the disc reflective surface by the objective lens in the optical pick-up block. Therefore, when checking the laser diode emission, observe from more than 30 cm away from the objective lens.

### Notes on Chip Component Replacement

- Never reuse a disconnected chip component.
- Notice that the minus side of a tantalum capacitor may be damaged by heat.

If the optical pick-up block is defective, please replace the whole optical pick-up block.
Never turn the semi-fixed resistor located at the side of optical pick-up block.

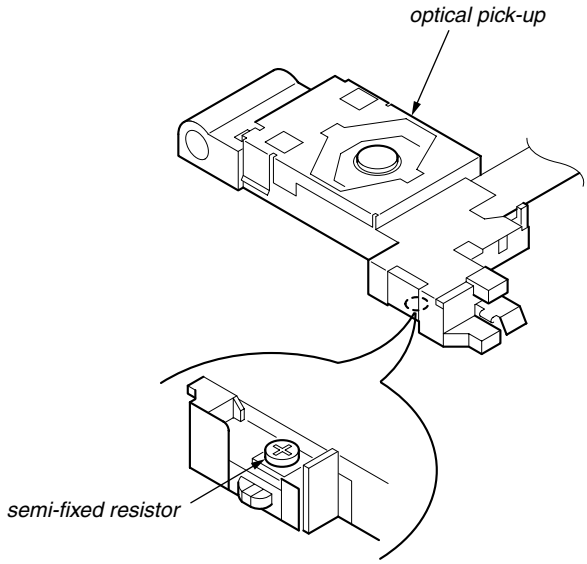


### EXTENSION CABLE AND SERVICE POSITION

When repairing or servicing this set, connect the jig (extension cable) as shown below.

- Connect the MAIN board (CNP301) and the SERVO board (CN1) with the extension cable (Part No. J-2502-076-1).

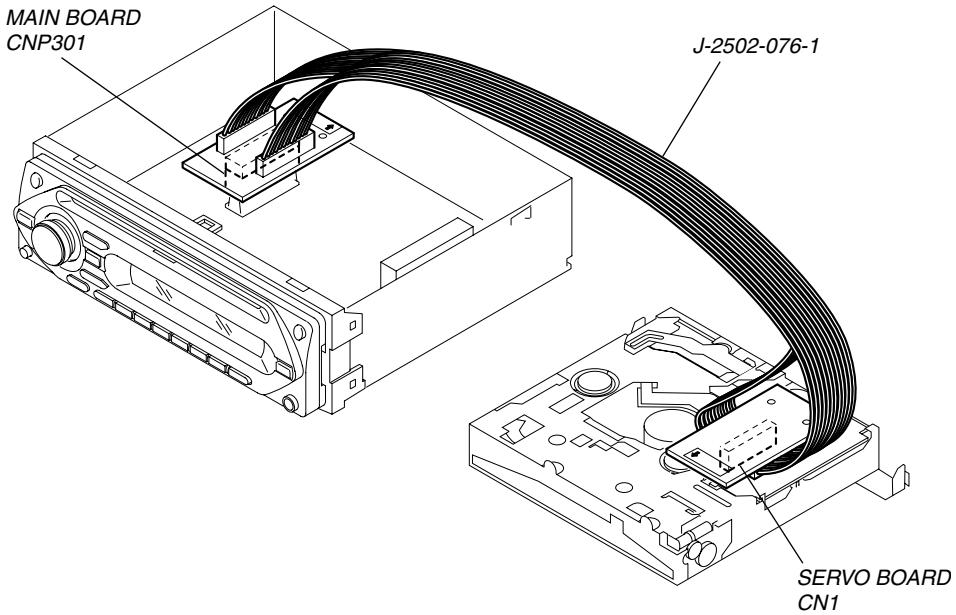

### TEST DISCS

Please use the following test discs for the check on the voltage and the waveforms of the CD section.

YDES-18 (Part No. 3-702-101-01)
PATD-012 (Part No. 4-225-203-01)

### Notes on CD-DA/CD-R/CD-RW

- CD playback:
  You can play CD-DA and CD-R/CD-RW for audio use.

## ● UNLEADED SOLDER

Boards requiring use of unleaded solder are printed with the lead-free mark (LF) indicating the solder contains no lead.
(Caution: Some printed circuit boards may not come printed with the lead free mark due to their particular size.)

## : LEAD FREE MARK

Unleaded solder has the following characteristics.

- Unleaded solder melts at a temperature about 40°C higher than ordinary solder.
  Ordinary soldering irons can be used but the iron tip has to be applied to the solder joint for a slightly longer time.
  Soldering irons using a temperature regulator should be set to about 350°C.
  Caution: The printed pattern (copper foil) may peel away if the heated tip is applied for too long, so be careful!
- Strong viscosity
  Unleaded solder is more viscous (sticky, less prone to flow) than ordinary solder so use caution not to let solder bridges occur such as on IC pins, etc.
- Usable with ordinary solder
  It is best to use only unleaded solder but unleaded solder may also be added to ordinary solder.

## TABLE OF CONTENTS

**1. GENERAL**
Location of Controls and Basic Operations ..... 5
Connections ..... 5

**2. DISASSEMBLY**
2-1. Sub Panel Assy ..... 8
2-2. CD Mechanism Block ..... 8
2-3. Main Board ..... 9
2-4. Chassis (T) Sub Assy ..... 9
2-5. Roller Arm Assy ..... 10
2-6. Chassis (OP) Assy ..... 10
2-7. Optical Pick-up ..... 11
2-8. SL Motor Assy (M902) ..... 11
2-9. LE Motor Assy (M903) ..... 12
2-10. Servo Board ..... 12

**3. DIAGRAMS**
3-1. Block Diagram –CD Section– ..... 13
3-2. Block Diagram –Main Section– ..... 14
3-3. Block Diagram –Display Section– ..... 15
3-4. Circuit Boards Location ..... 15
3-5. Printed Wiring Boards –CD Mechanism Section– ..... 16
3-6. Schematic Diagram –CD Mechanism Section– ..... 17
3-7. Printed Wiring Board –Main Section– ..... 18
3-8. Schematic Diagram –Main Section (1/3)– ..... 19
3-9. Schematic Diagram –Main Section (2/3)– ..... 20
3-10. Schematic Diagram –Main Section (3/3)– ..... 21
3-11. Printed Wiring Boards –Key Section– ..... 22
3-12. Schematic Diagram –Key Section– ..... 23

**4. EXPLODED VIEWS**
4-1. Main Section ..... 31
4-2. Front Panel Section ..... 32
4-3. CD Mechanism Section (1) (MG-611XE-186//C) ..... 33
4-4. CD Mechanism Section (2) (MG-611XE-186//C) ..... 34
4-5. CD Mechanism Section (3) (MG-611XE-186//C) ..... 35
4-6. CD Mechanism Section (4) (MG-611XE-186//C) ..... 36

**5. ELECTRICAL PARTS LIST** ..... 37

# SECTION 1
# GENERAL

This section is extracted from instruction manual.

## Location of controls and basic operations

### Main unit

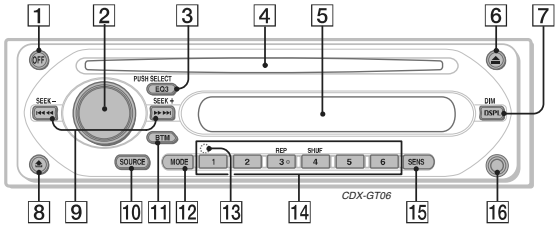


1 **OFF button**
To power off; stop the source.

2 **Volume control dial/select button**
To adjust volume (rotate); select setup items (press and rotate).

3 **EQ3 (equalizer) button**
To select an equalizer type (XPLOD, VOCAL, CLUB, JAZZ, NEW AGE, ROCK, CUSTOM or OFF).

4 **Disc slot**
To insert the disc (label side up), playback starts.

5 **Display window**

6 **⏏ (eject) button**
To eject the disc.

7 **DSPL (display)/DIM (dimmer) button**
To change display items (press); change the display brightness (press and hold).

8 **(front panel release) button**

9 **SEEK –/+ buttons**
CD:
To skip tracks (press); skip tracks continuously (press, then press again within about 1 second and hold); reverse/fast-forward a track (press and hold).
Radio:
To tune in stations automatically (press); find a station manually (press and hold).

10 **SOURCE button**
To power on; change the source (Radio/CD/AUX).

11 **BTM button**
To start the BTM function (press and hold).

12 **MODE button**
To select the radio band (FM/AM).

13 **RESET button** (located behind the front panel)

14 **Number buttons**
CD:
(3): **REP**
To play the current track repeatedly.
(4): **SHUF**
To play the tracks in random order.
Radio:
To receive stored stations (press); store stations (press and hold).

15 **SENS button**
To improve weak reception: LOCAL/MONO.

16 **AUX input jack**
To connect a portable audio device.

## • CONNECTIONS

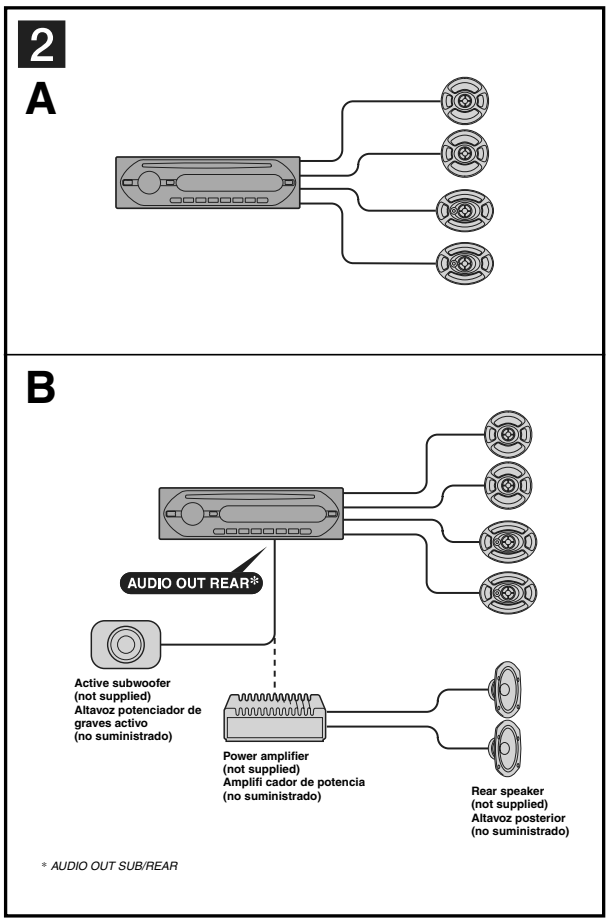


## Connection

### Connection example 2

***Notes* (2-B)**
- *Be sure to connect the ground lead before connecting the amplifier.*
- *The alarm will only sound if the built-in amplifier is used.*

## Conexion

### Ejemplo de conexiones 2

***Notas* (2-B)**
- *Asegúrese de conectar primero el cable de conexión a masa antes de realizar la conexión del amplifi cador.*
- *La alarma sonará únicamente si se utiliza el amplifi cador incorporado.*

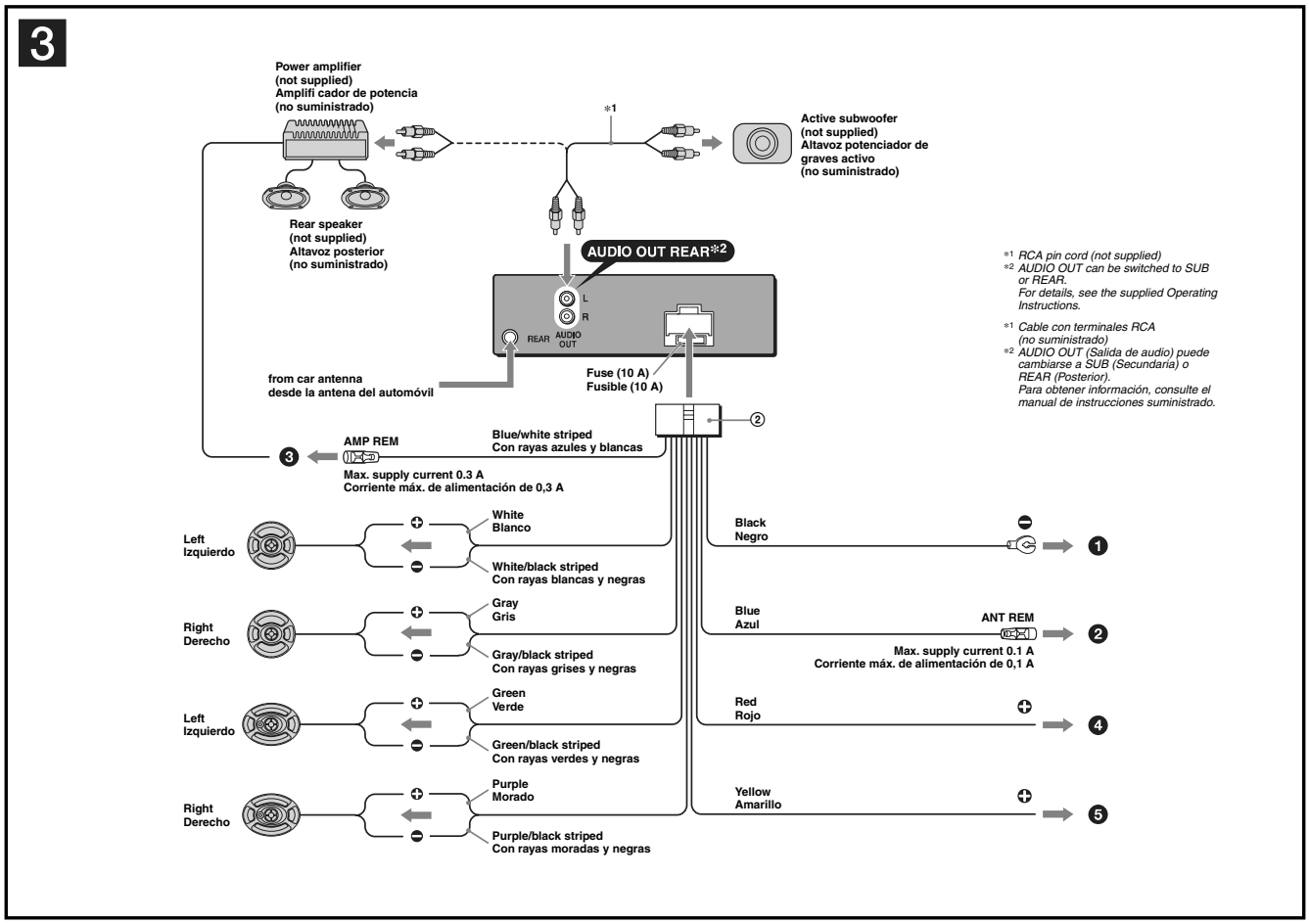


## Connection diagram 3

❶ **To a metal surface of the car**
*First connect the black ground lead, then connect the yellow and red power input leads.*

❷ **To the power antenna control lead or power supply lead of antenna booster amplifier**
***Notes***
- *It is not necessary to connect this lead if there is no power antenna or antenna booster, or with a manually-operated telescopic antenna.*
- *When your car has a built-in FM/AM antenna in the rear/side glass, see "Notes on the control and power supply leads."*

❸ **To AMP REMOTE IN of an optional power amplifier**
*This connection is only for amplifiers. Connecting any other system may damage the unit.*

❹ **To the +12 V power terminal which is energized in the accessory position of the ignition key switch**
***Notes***
- *If there is no accessory position, connect to the +12 V power (battery) terminal which is energized at all times.*
  *Be sure to connect the black ground lead to a metal surface of the car first.*
- *When your car has a built-in FM/AM antenna in the rear/side glass, see "Notes on the control and power supply leads."*

❺ **To the +12 V power terminal which is energized at all times**
*Be sure to connect the black ground lead to a metal surface of the car first.*

***Notes on the control and power supply leads***
- *The power antenna control lead (blue) supplies +12 V DC when you turn on the tuner.*
- *When your car has built-in FM/AM antenna in the rear/side glass, connect the power antenna control lead (blue) or the accessory power input lead (red) to the power terminal of the existing antenna booster. For details, consult your dealer.*
- *A power antenna without a relay box cannot be used with this unit.*

***Memory hold connection***
*When the yellow power input lead is connected, power will always be supplied to the memory circuit even when the ignition switch is turned off.*

***Notes on speaker connection***
- *Before connecting the speakers, turn the unit off.*
- *Use speakers with an impedance of 4 to 8 ohms, and with adequate power handling capacities to avoid its damage.*
- *Do not connect the speaker terminals to the car chassis, or connect the terminals of the right speakers with those of the left speaker.*
- *Do not connect the ground lead of this unit to the negative (–) terminal of the speaker.*
- *Do not attempt to connect the speakers in parallel.*
- *Connect only passive speakers. Connecting active speakers (with built-in amplifiers) to the speaker terminals may damage the unit.*
- *To avoid a malfunction, do not use the built-in speaker leads installed in your car if the unit shares a common negative (–) lead for the right and left speakers.*
- *Do not connect the unit's speaker leads to each other.*

***Note on connection***
*If speaker and amplifier are not connected correctly, "FAILURE" appears in the display. In this case, make sure the speaker and amplifier are connected correctly.*

## Diagrama de conexión 3

❶ **A una superficie metálica del automóvil**
*Conecte primero el cable de conexión a masa negro, y después los cables con rayas naranjas y blancas, amarillo, y rojo de entrada de alimentación.*

❷ **Al cable de control de la antena motorizada o al cable de fuente de alimentación del amplificador de señal de la antena**
***Notas***
- *Si no se dispone de antena motorizada ni de amplifi cador de antena, o se utiliza una antena telescópica accionada manualmente, no será necesario conectar este cable.*
- *Si el automóvil incorpora una antena de FM/AM en el cristal posterior o lateral, consulte "Notas sobre los cables de control y de fuente de alimentación".*

❸ **A la toma AMP REMOTE IN de un amplificador de potencia opcional**
*Esta conexión es sólo para amplifi cadores. La conexión de cualquier otro sistema puede dañar la unidad.*

❹ **Al terminal de alimentación de +12 V que recibe energía en la posición de accesorio del interruptor de la llave de encendido**
***Notas***
- *Si no hay posición de accesorio, conéctelo al terminal de alimentación (batería) de +12 V que recibe energía sin interrupción.*
  *Asegúrese de conectar primero el cable de conexión a masa negro a una superfi cie metálica del automóvil.*
- *Si el automóvil incorpora una antena de FM/AM en el cristal posterior o lateral, consulte "Notas sobre los cables de control y de fuente de alimentación".*

❺ **Al terminal de alimentación de +12 V que recibe energía sin interrupción**
*Asegúrese de conectar primero el cable de conexión a masa negro a una superficie metálica del automóvil.*

***Notas sobre los cables de control y de fuente de alimentación***
- *El cable de control de la antena motorizada (azul) suministrará cc de + 12 V cuando conecte la alimentación del sintonizador.*
- *Si el automóvil dispone de una antena de FM/AM incorporada en el cristal posterior o lateral, conecte el cable de control de antena motorizada (azul) o el cable de entrada de alimentación auxiliar (rojo) al terminal de alimentación del amplificador de antena existente. Para obtener más información, consulte a su distribuidor.*
- *Con esta unidad no es posible utilizar una antena motorizada sin caja de relé.*

***Conexión para protección de la memoria***
*Si conecta el cable de entrada de alimentación amarillo, el circuito de la memoria recibirá siempre alimentación, aunque apague el interruptor de encendido.*

***Notas sobre la conexión de los altavoces***
- *Antes de conectar los altavoces, desconecte la alimentación de la unidad.*
- *Utilice altavoces con una impedancia de 4 a 8 Ω con la capacidad de potencia adecuada para evitar que se dañen.*
- *No conecte los terminales de altavoz al chasis del automóvil, ni conecte los terminales del altavoz derecho con los del izquierdo.*
- *No conecte el cable de conexión a masa de esta unidad al terminal negativo (–) del altavoz.*
- *No intente conectar los altavoces en paralelo.*
- *Conecte solamente altavoces pasivos. Si conecta altavoces activos (con amplifi cadores incorporados) a los terminales de altavoz, puede dañar la unidad.*
- *Para evitar fallas de funcionamiento, no utilice los cables de altavoz incorporados instalados en el automóvil si la unidad comparte un cable negativo común (–) para los altavoces derecho e izquierdo.*
- *No conecte los cables de altavoz de la unidad entre sí.*

***Nota sobre la conexión***
*Si el altavoz y el amplificador no están conectados correctamente, aparecerá "Failure" en la pantalla. En tal caso compruebe la conexión de ambos dispositivos.*

# SECTION 2
# DISASSEMBLY

**Note:** This set can be disassemble according to the following sequence.

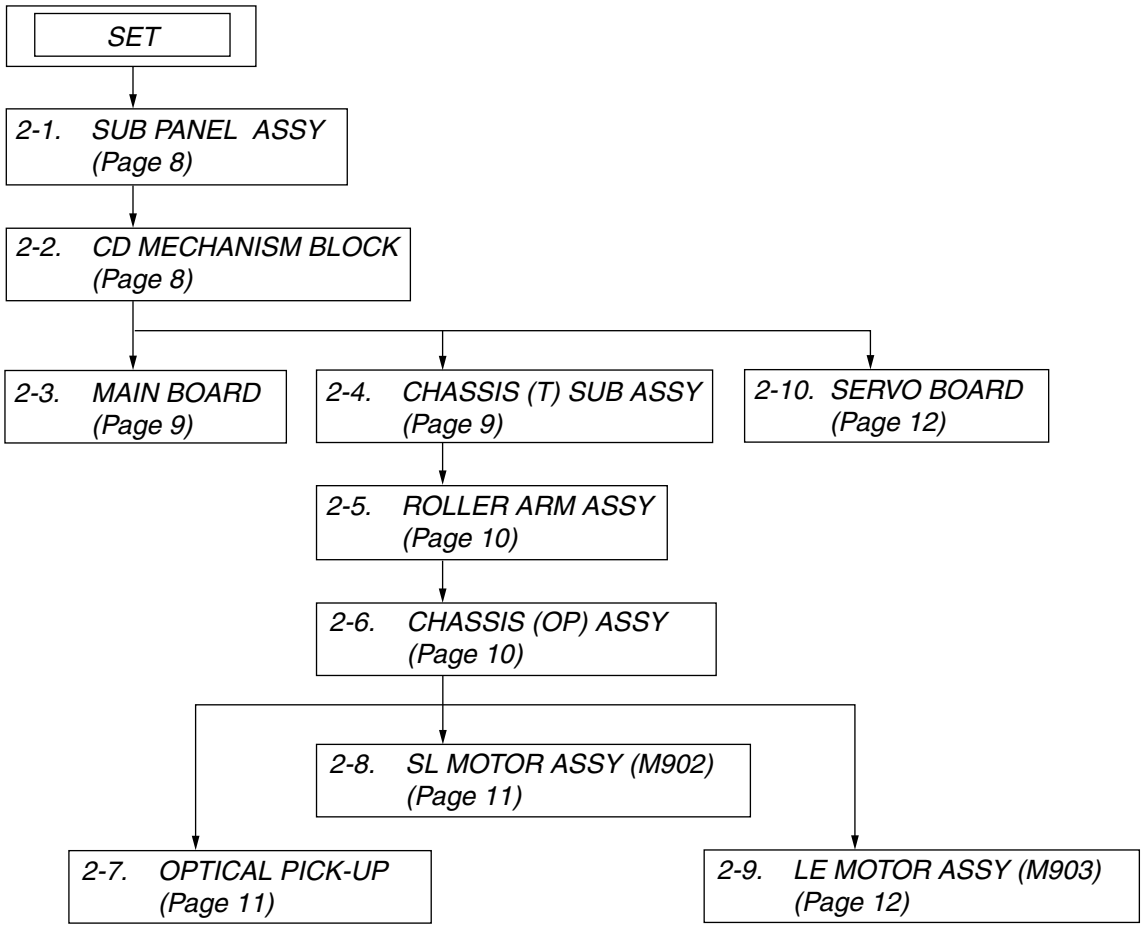

**Note:** Follow the disassembly procedure in the numerical order given.

## 2-1. SUB PANEL ASSY

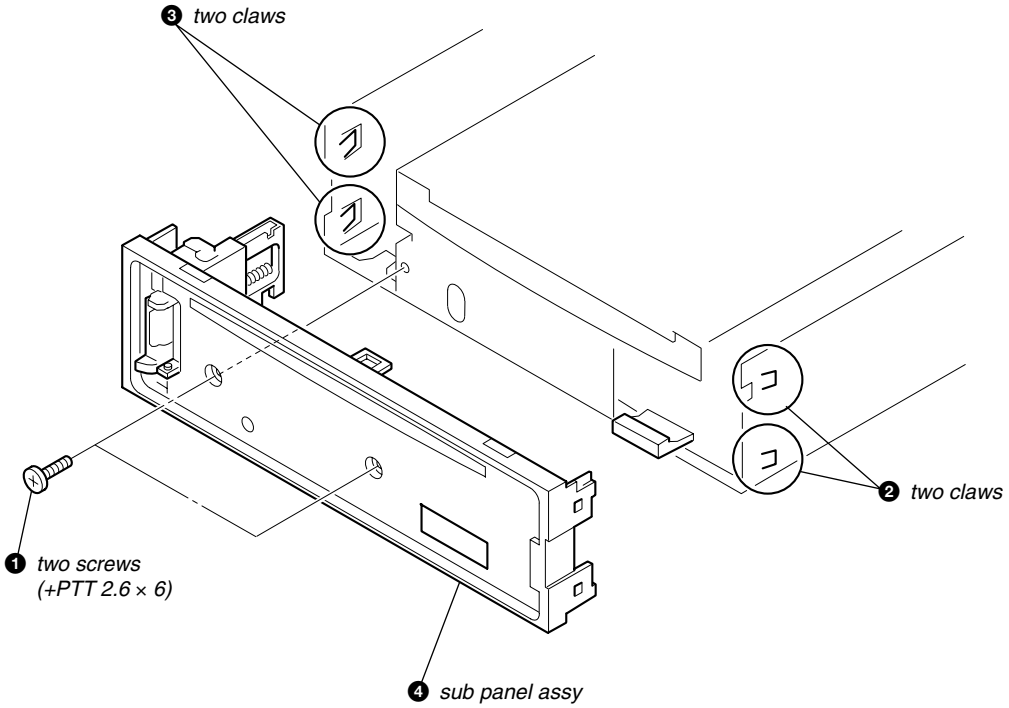


## 2-2. CD MECHANISM BLOCK

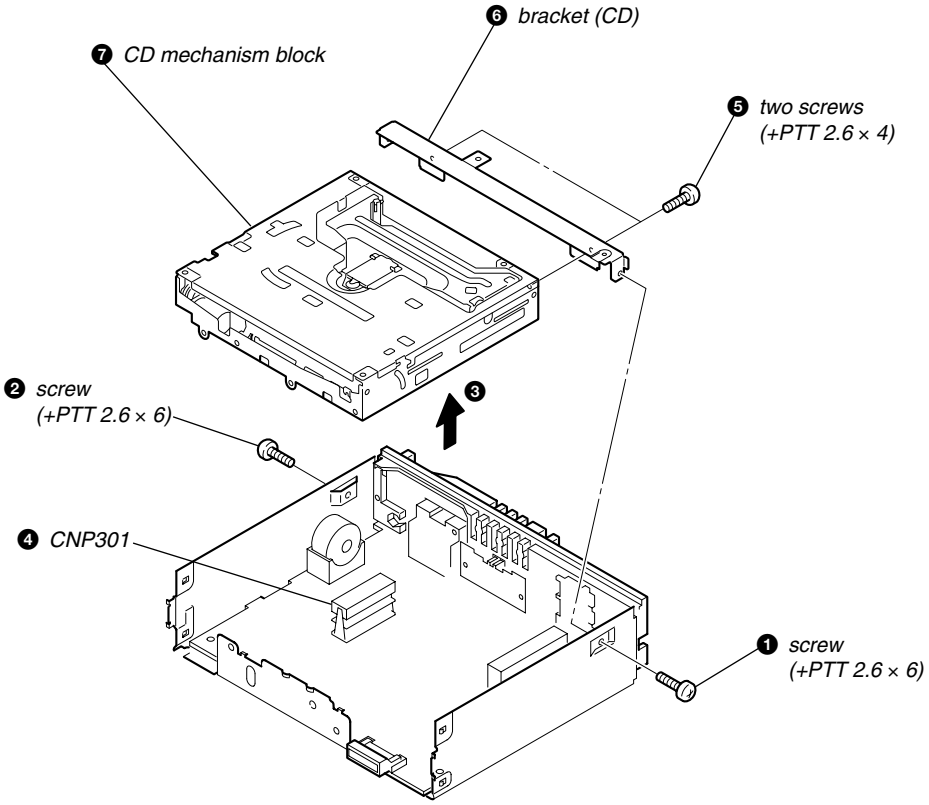

## 2-3. MAIN BOARD

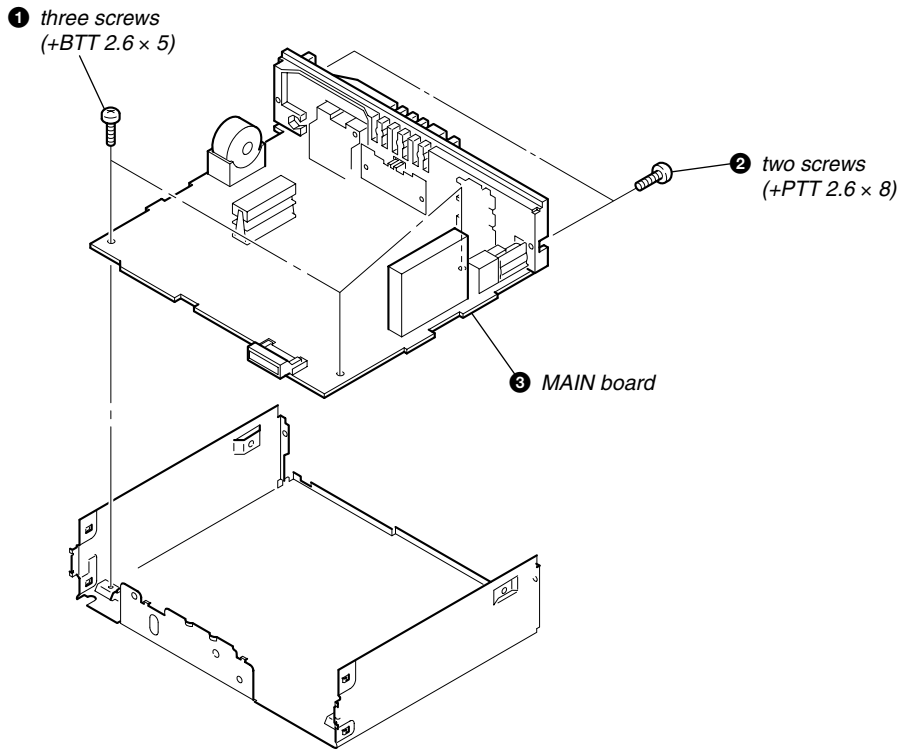


## 2-4. CHASSIS (T) SUB ASSY

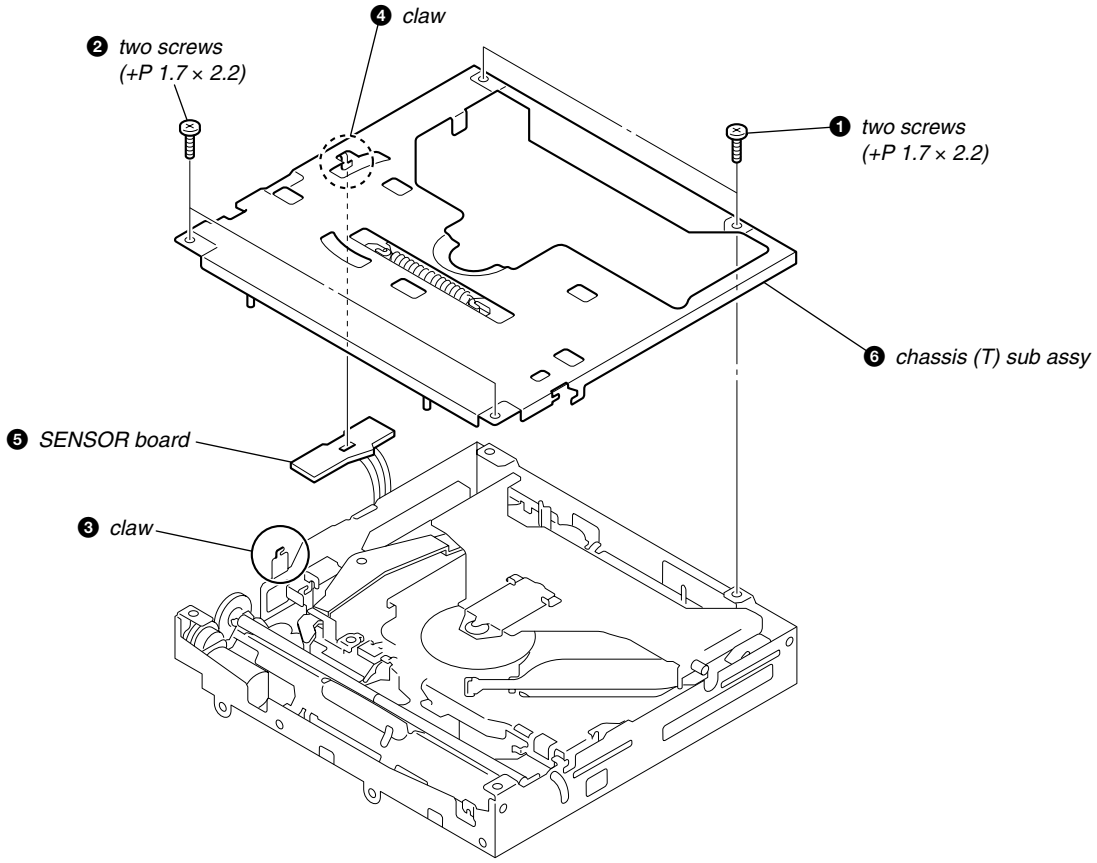

## 2-5. ROLLER ARM ASSY

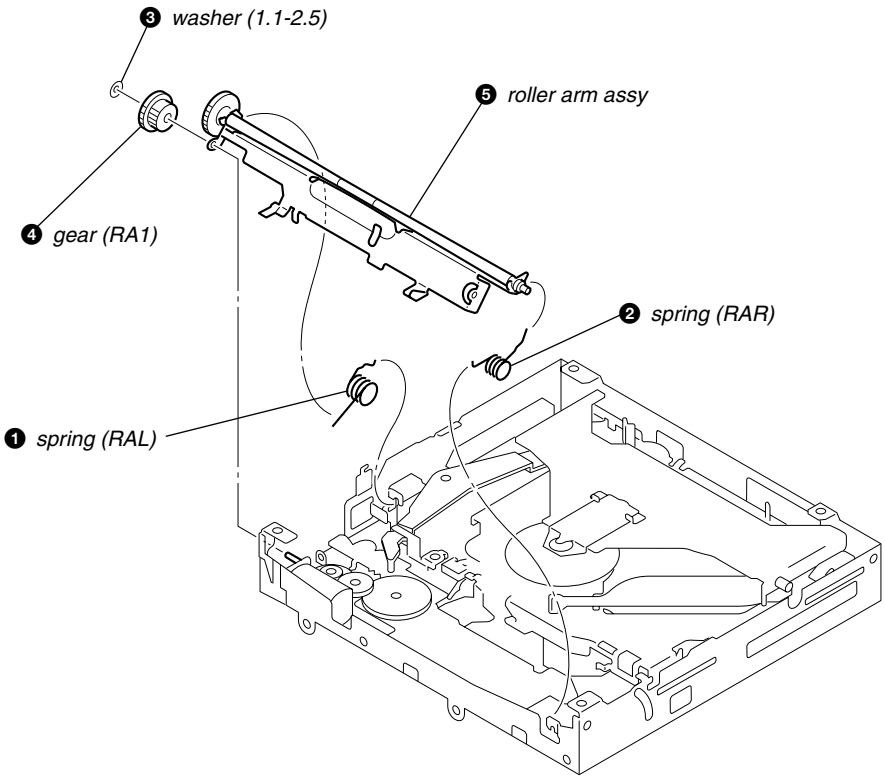


## 2-6. CHASSIS (OP) ASSY

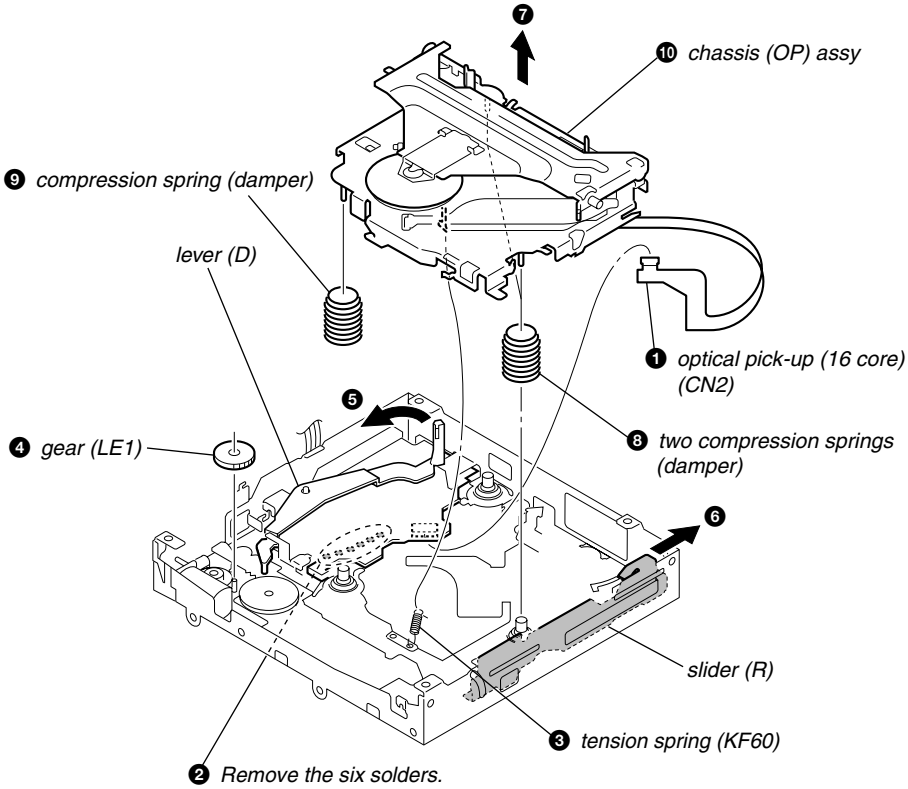

## 2-7. OPTICAL PICK-UP

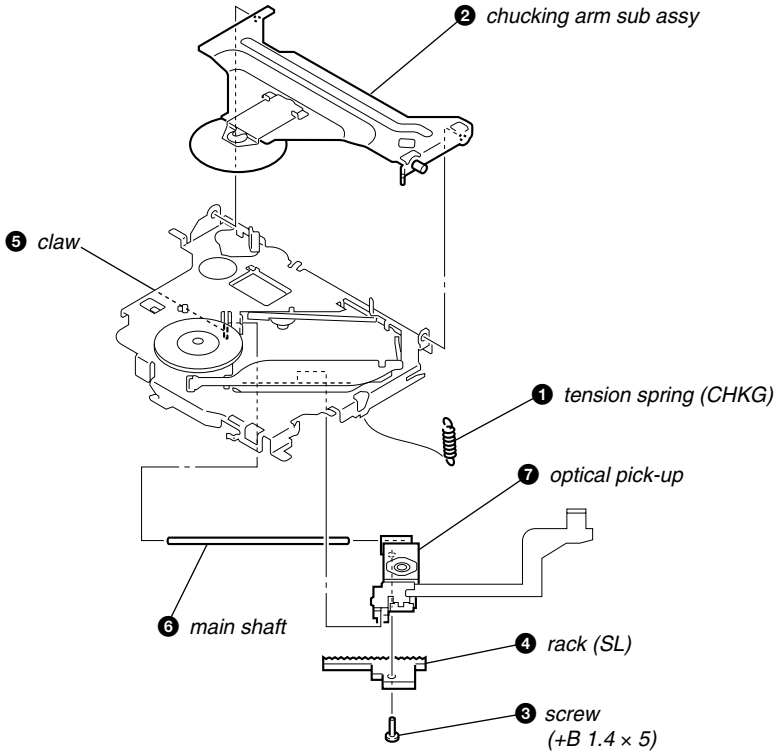


## 2-8. SL MOTOR ASSY (M902)

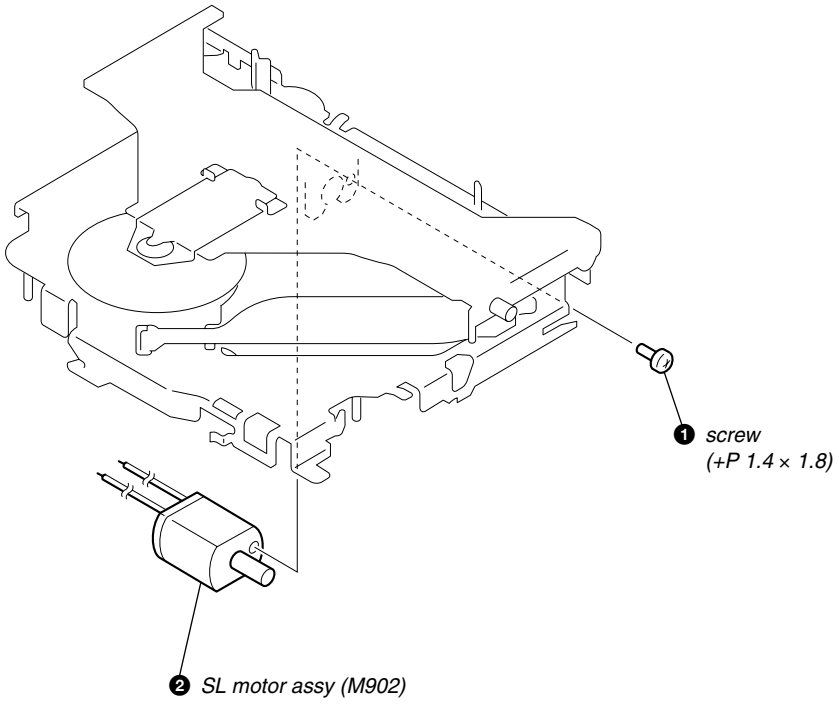

## 2-9. LE MOTOR ASSY (M903)

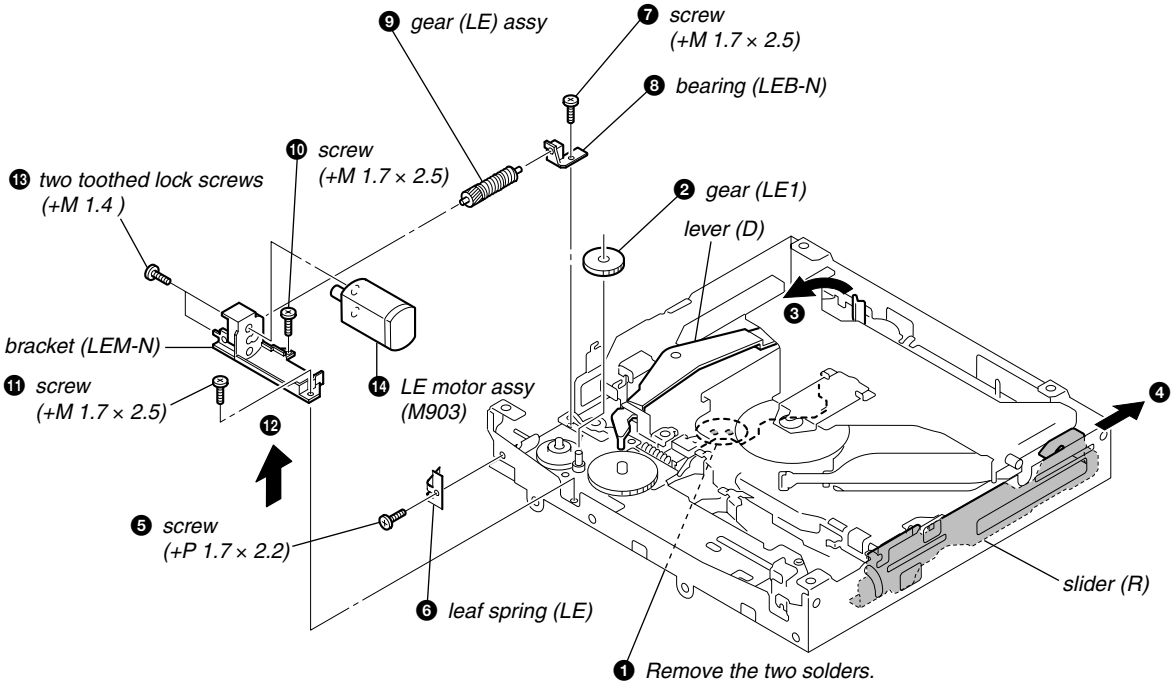


## 2-10. SERVO BOARD

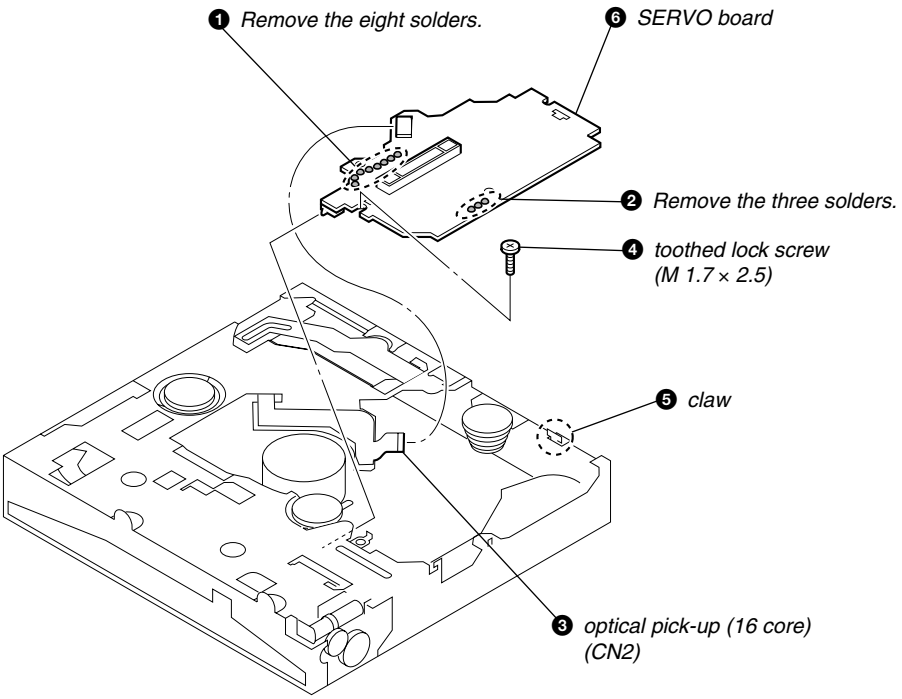

# SECTION 3
# DIAGRAMS

## 3-1. BLOCK DIAGRAM — CD SECTION —

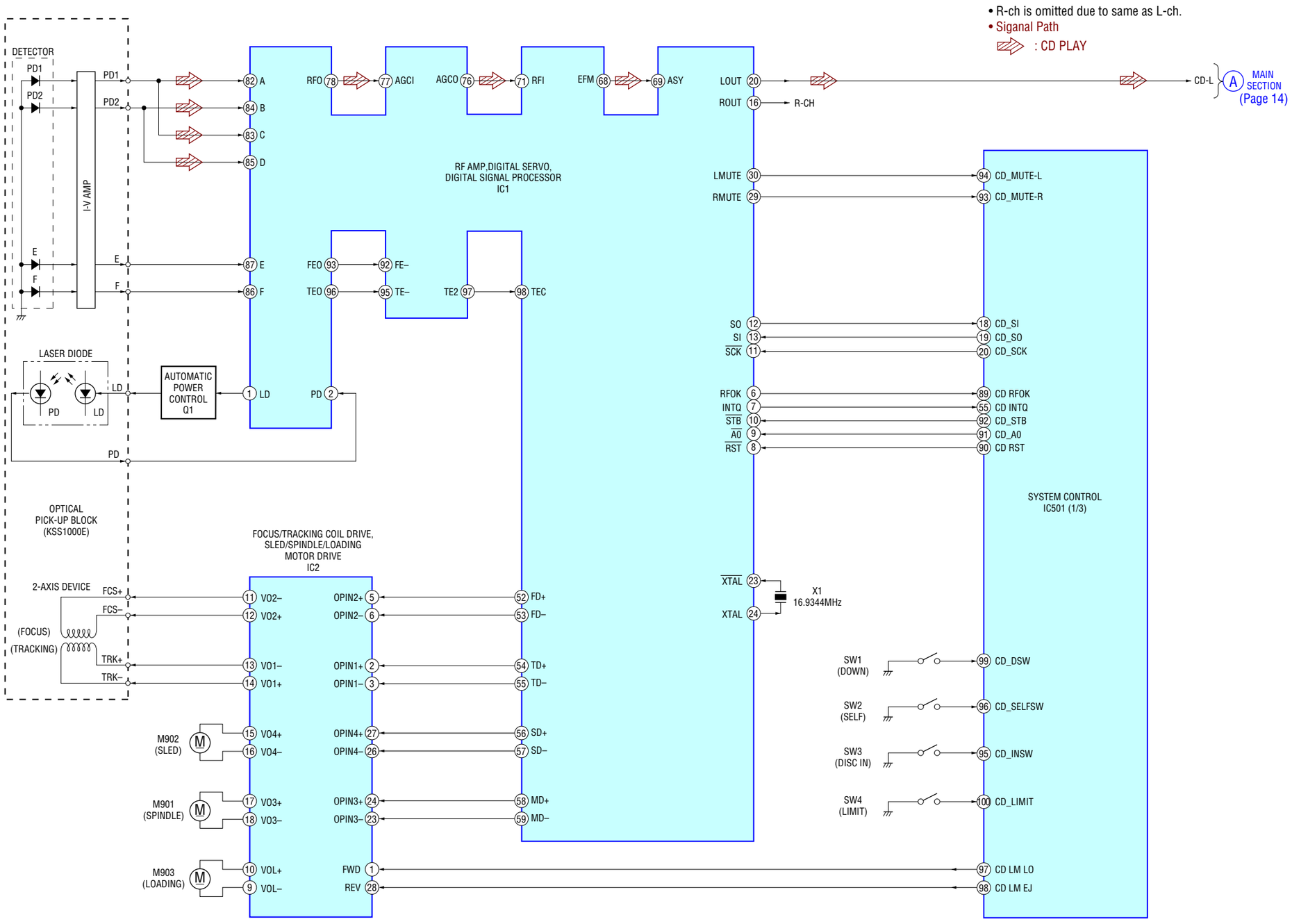

### 3-2. BLOCK DIAGRAM — MAIN SECTION —

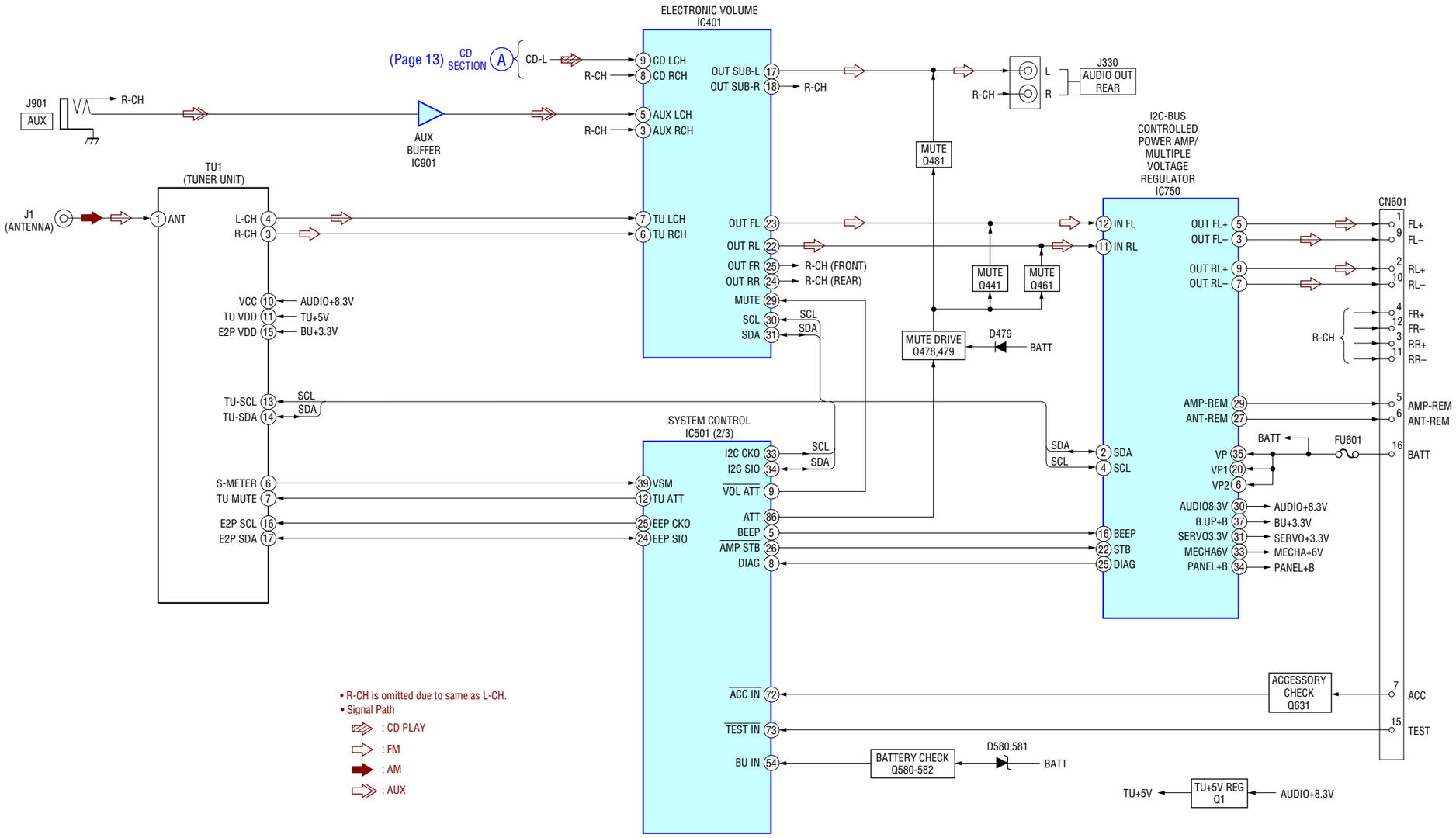

## 3-3. BLOCK DIAGRAM — DISPLAY SECTION —

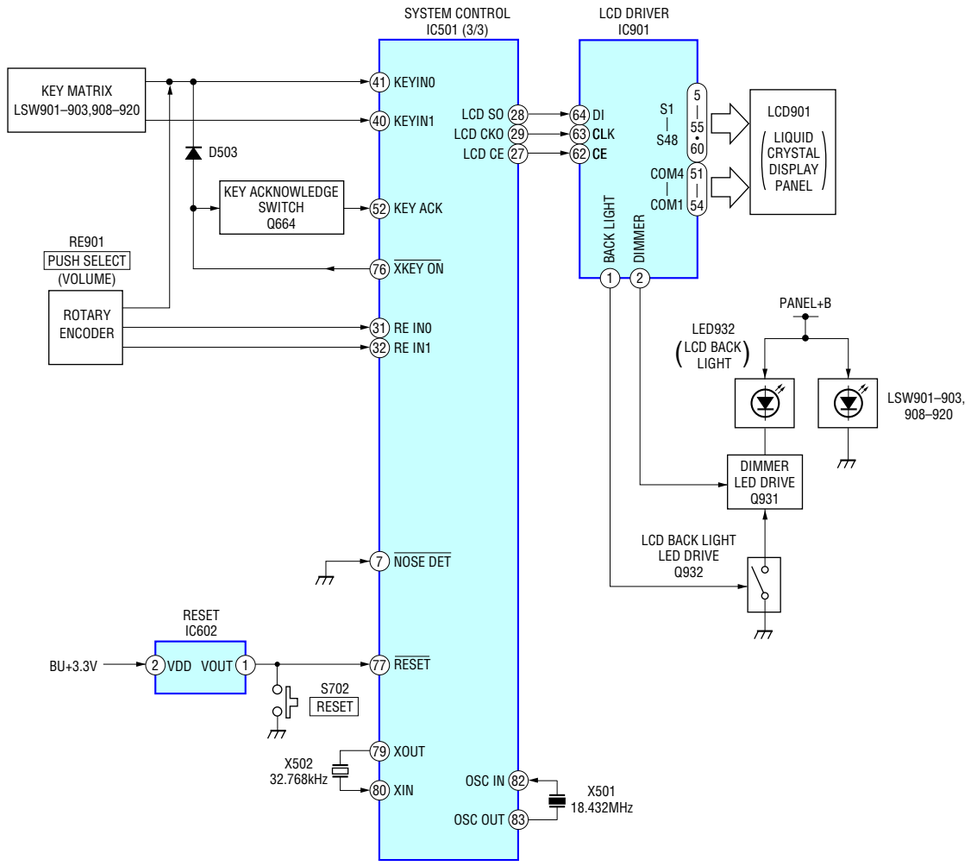


## 3-4. CIRCUIT BOARDS LOCATION

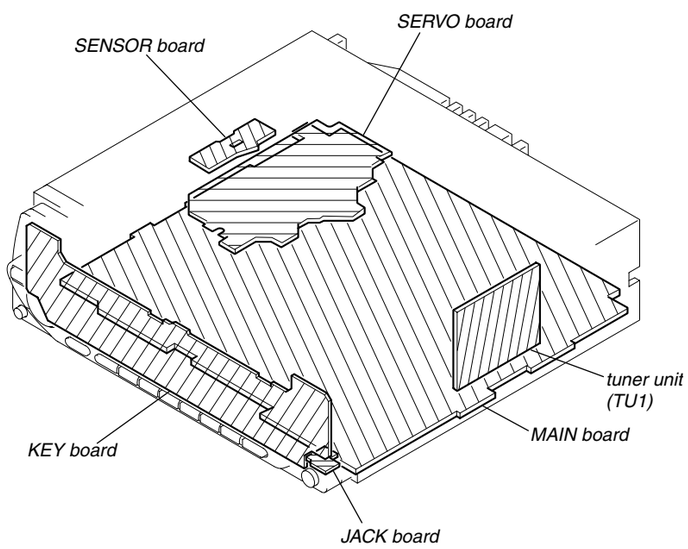


## • NOTE FOR PRINTED WIRING BOARDS AND SCHEMATIC DIAGRAMS

**THIS NOTE IS COMMON FOR PRINTED WIRING BOARDS AND SCHEMATIC DIAGRAMS.**
**(In addition to this, the necessary note is printed in each block.)**

### For schematic diagrams.

**Note:**
- All capacitors are in μF unless otherwise noted. (p: pF) 50 WV or less are not indicated except for electrolytics and tantalums.
- All resistors are in Ω and 1/4 W or less unless otherwise specified.
- △ : internal component.
- ▭ : panel designation.

**Note:** The components identified by mark ⚠ or dotted line with mark ⚠ are critical for safety.
Replace only with part number specified.

- ▬▬ : B+ Line.
- ▬ ▬ ▬ : B– Line.
- ▭ : adjustment for repair.
- Voltages and waveforms are dc with respect to ground under no-signal (detuned) conditions.
- CD mechanism section
  no mark : CD PLAY
- Main (1/3), (2/3), (3/3) and Key sections
  no mark : FM
  ( ) : AM
  < > : CD PLAY
  ∗ : Impossible to measure
- Voltages are taken with a VOM (Input impedance 10 MΩ). Voltage variations may be noted due to normal production tolerances.
- Waveforms are taken with a oscilloscope. Voltage variations may be noted due to normal production tolerances.
- Circled numbers refer to waveforms.
- Signal path.
  ⇨ : CD PLAY
  ⇨ : FM
  ➡ : AM
  ⇨ : AUX

### For printed wiring boards.

**Note:**
- ○——— : parts extracted from the component side.
- ——— : parts extracted from the conductor side.
- ○ : Through hole.
- ▭ : Pattern from the side which enables seeing.

(The other layers' patterns are not indicated.)

Caution:
Pattern face side: (Side B) Parts on the pattern face side seen from the pattern face are indicated.
Parts face side: (Side A) Parts on the parts face side seen from the parts face are indicated.

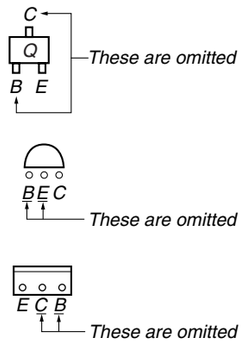

## 3-5. PRINTED WIRING BOARDS — CD MECHANISM SECTION —

• Refer to page 15 for Circuit Boards Location. : Uses unleaded solder.

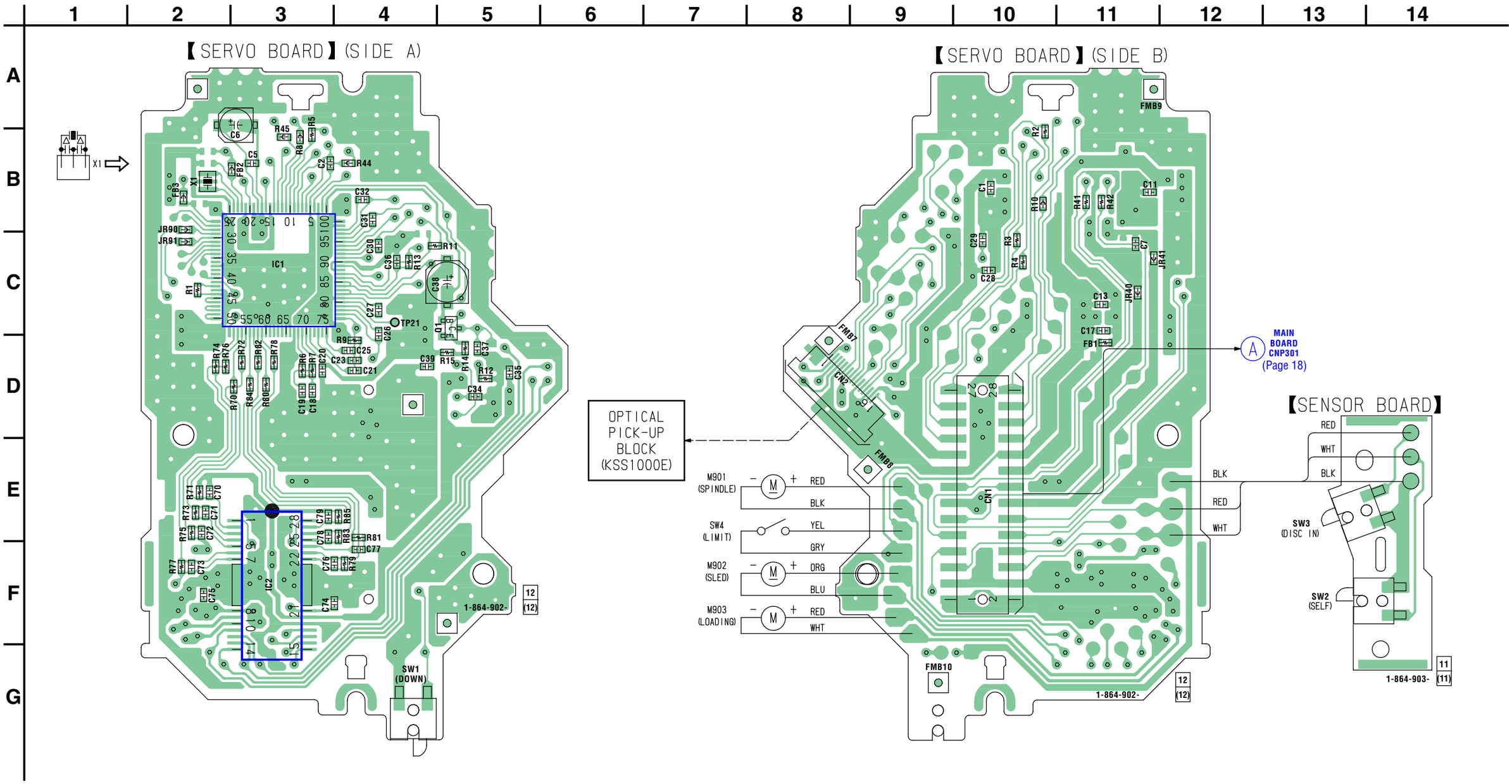

## 3-6. SCHEMATIC DIAGRAM — CD MECHANISM SECTION —


- Refer to page 24 for Waveforms.
- Refer to page 24 for IC Block Diagram.
- Refer to page 27 for IC Pin Description of IC1.


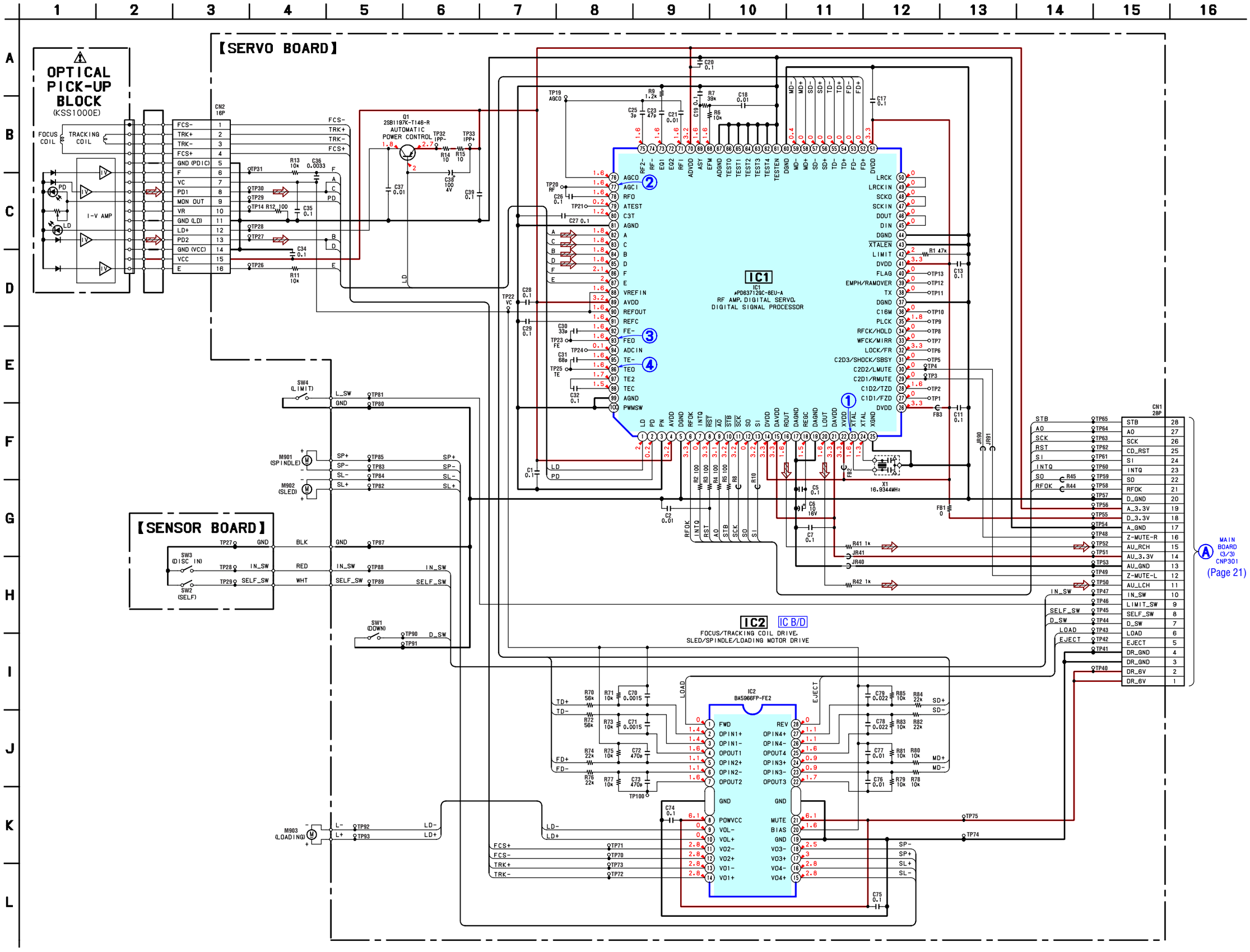

## 3-7. PRINTED WIRING BOARD — MAIN SECTION —

• Refer to page 15 for Circuit Boards Location. : Uses unleaded solder.

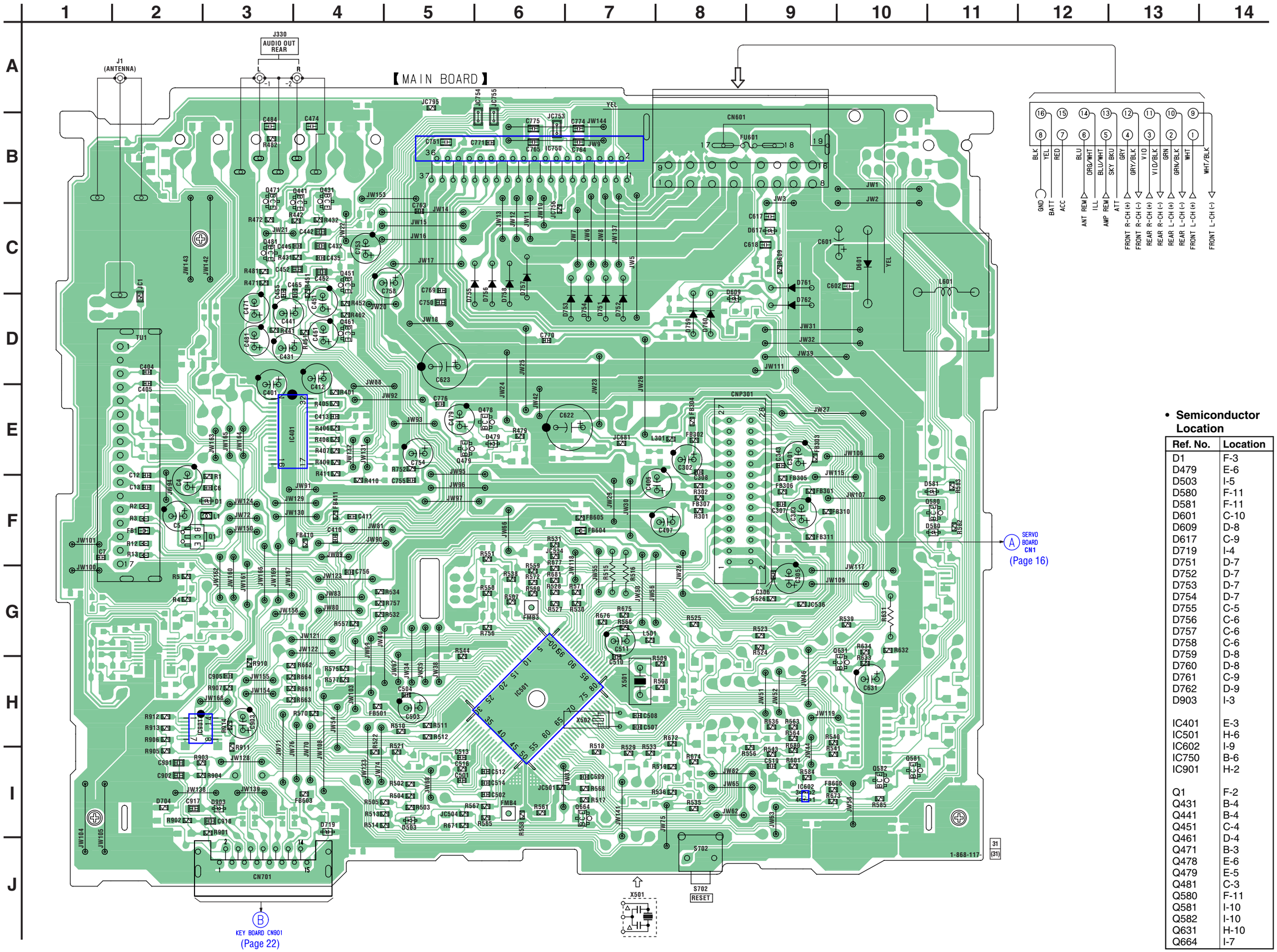


• Semiconductor Location

| Ref. No. | Location |
|---|---|
| D1 | F-3 |
| D479 | E-6 |
| D503 | I-5 |
| D580 | F-11 |
| D581 | F-11 |
| D601 | C-10 |
| D609 | D-8 |
| D617 | C-9 |
| D719 | I-4 |
| D751 | D-7 |
| D752 | D-7 |
| D753 | D-7 |
| D754 | D-7 |
| D755 | C-5 |
| D756 | C-6 |
| D757 | C-6 |
| D758 | C-6 |
| D759 | D-8 |
| D760 | D-8 |
| D761 | C-9 |
| D762 | D-9 |
| D903 | I-3 |
| IC401 | E-3 |
| IC501 | H-6 |
| IC602 | I-9 |
| IC750 | B-6 |
| IC901 | H-2 |
| Q1 | F-2 |
| Q431 | B-4 |
| Q441 | B-4 |
| Q451 | C-4 |
| Q461 | D-4 |
| Q471 | B-3 |
| Q478 | E-6 |
| Q479 | E-5 |
| Q481 | C-3 |
| Q580 | F-11 |
| Q581 | I-10 |
| Q582 | I-10 |
| Q631 | H-10 |
| Q664 | I-7 |

### 3-8. SCHEMATIC DIAGRAM — MAIN SECTION (1/3) — • Refer to page 25 for IC Block Diagram.

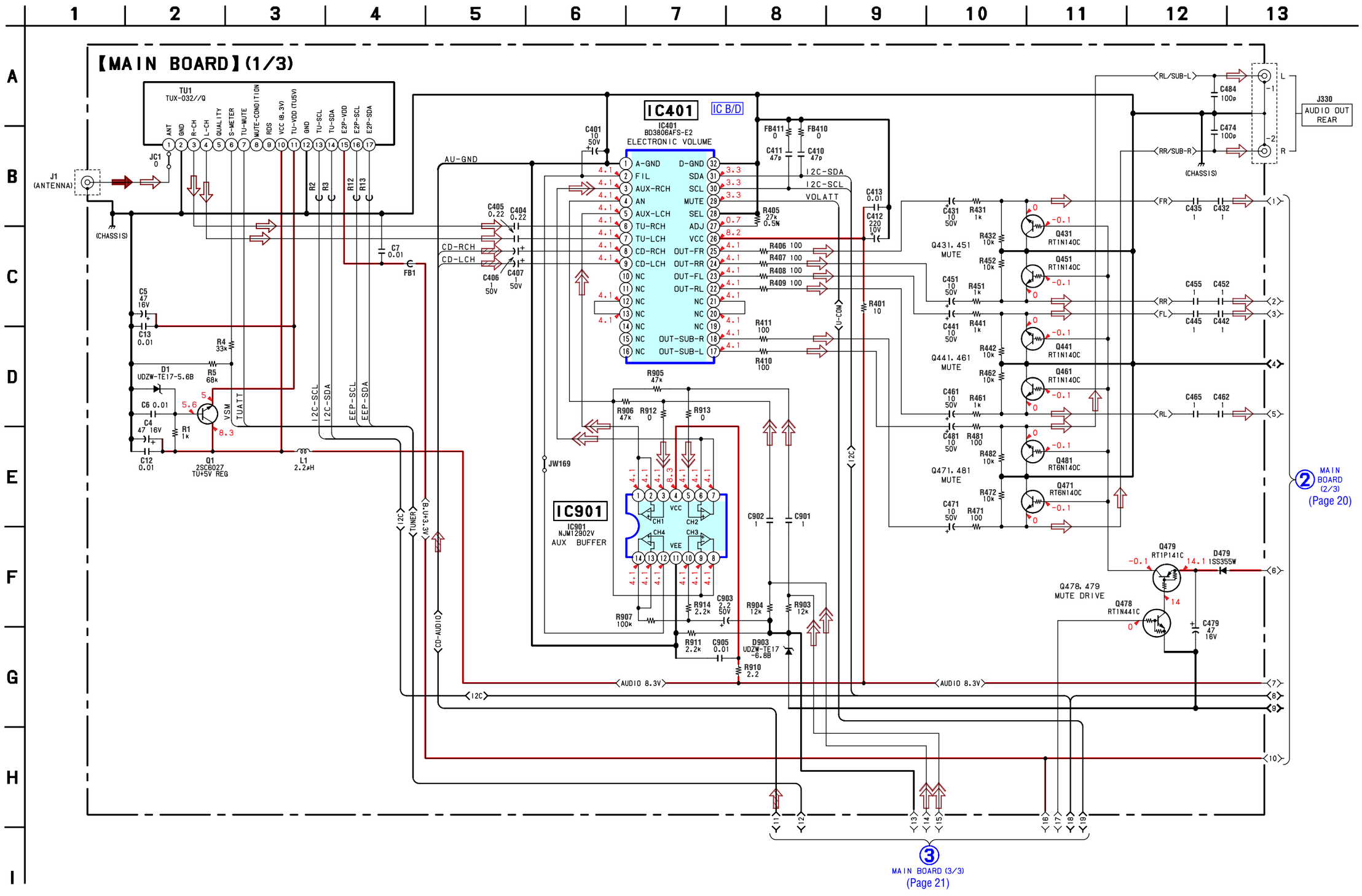

3-9. SCHEMATIC DIAGRAM — MAIN SECTION (2/3) — • Refer to page 26 for IC Block Diagram.

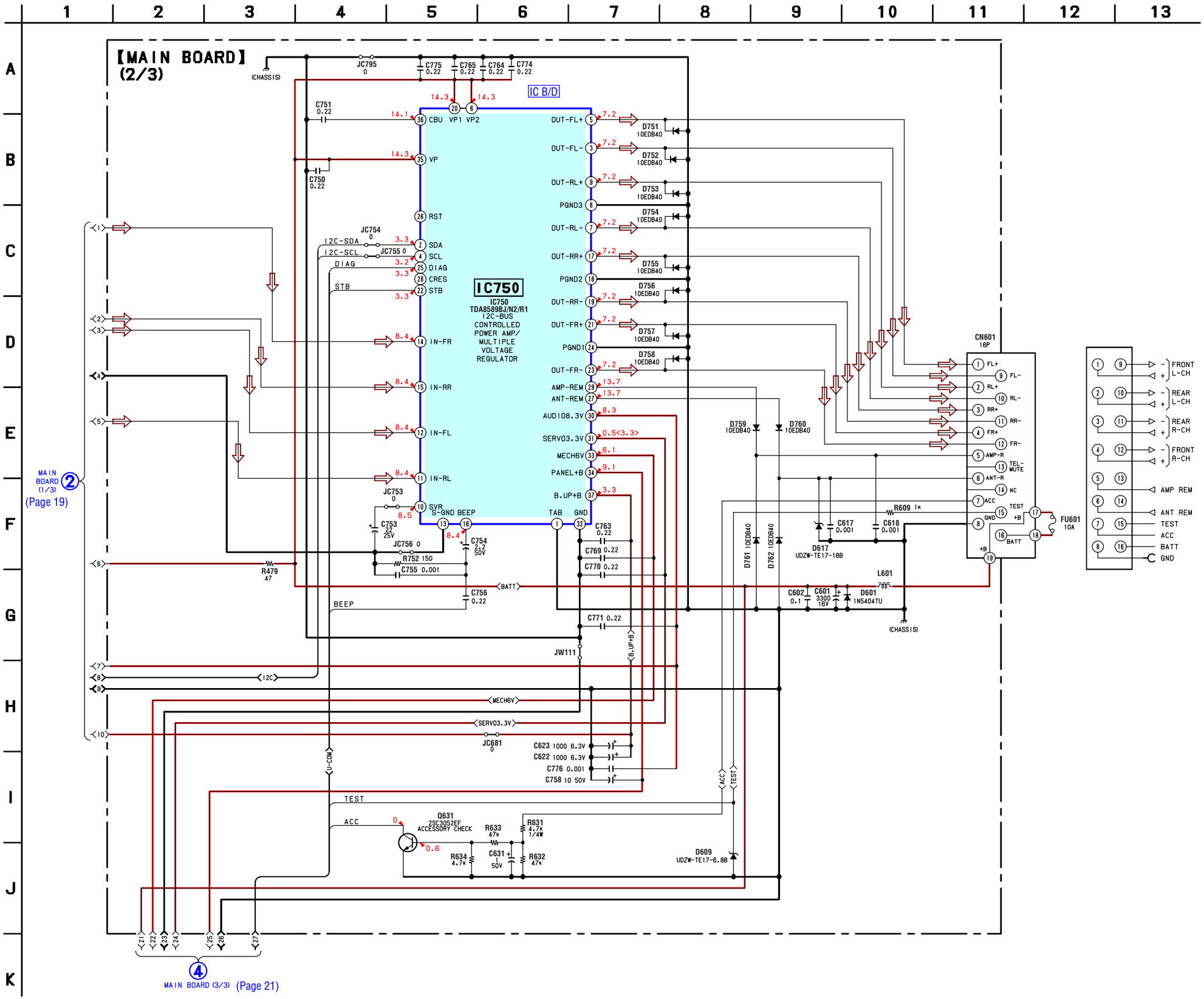

## 3-10. SCHEMATIC DIAGRAM — MAIN SECTION (3/3) —

- Refer to page 24 for Waveforms.
- Refer to page 29 for IC Pin Description of IC501.

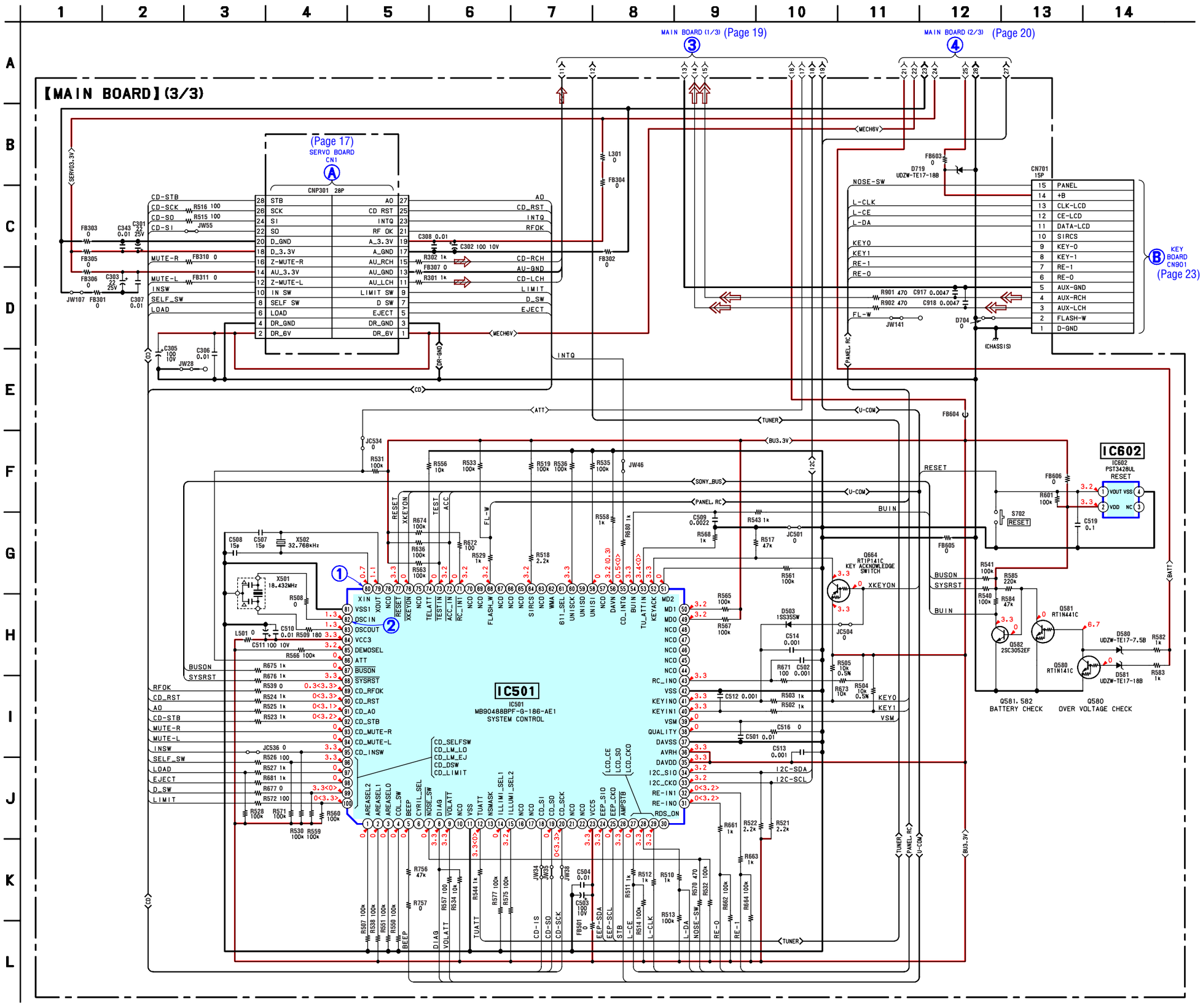

## 3-11. PRINTED WIRING BOARDS — KEY SECTION —

• Refer to page 15 for Circuit Boards Location. : Uses unleaded solder.

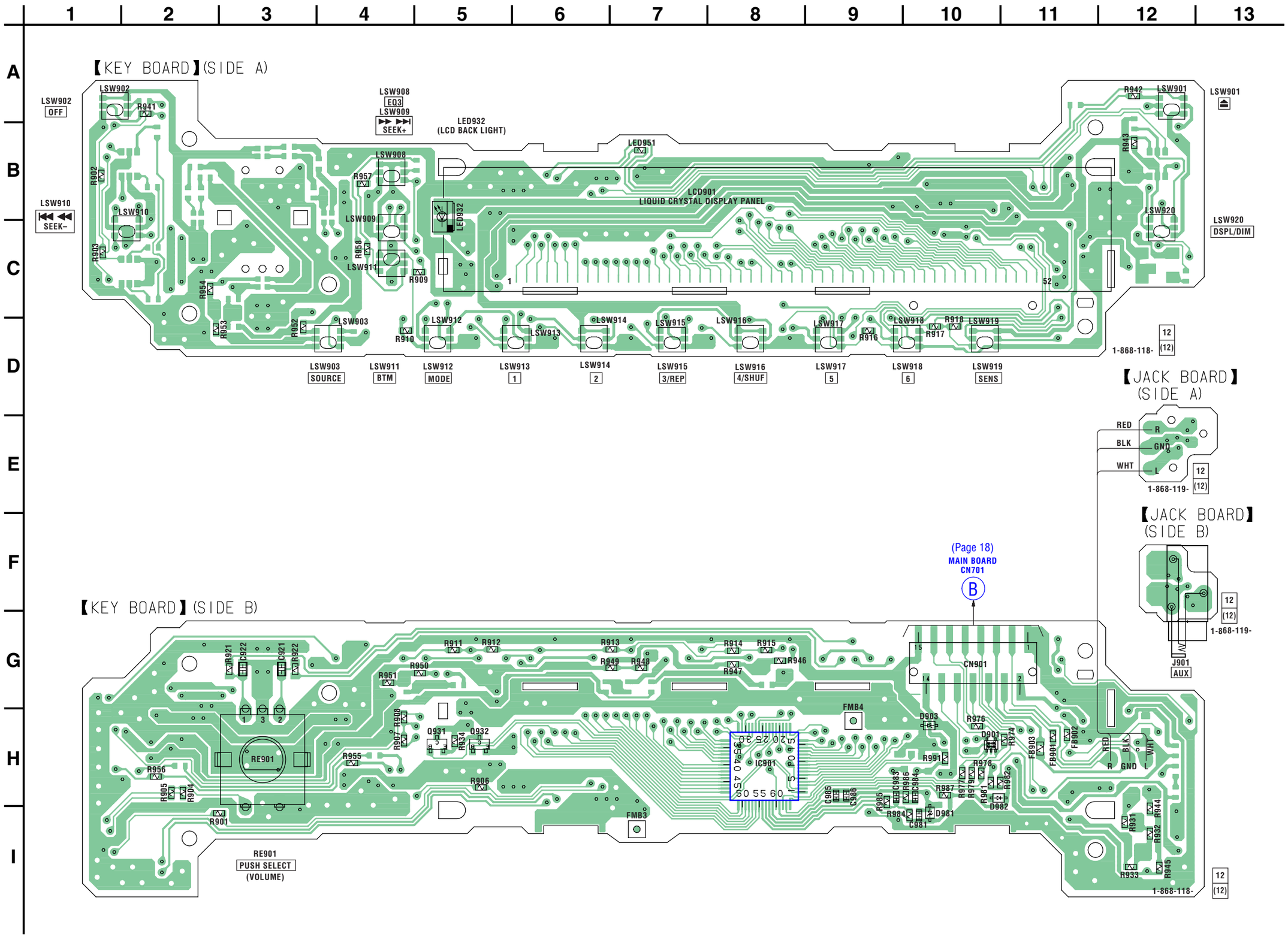


• **Semiconductor Location**

| Ref. No. | Location |
|---|---|
| D901 | H-10 |
| D903 | H-10 |
| D981 | H-10 |
| D982 | H-10 |
| IC901 | H-8 |
| LED932 | B-5 |
| Q931 | H-5 |
| Q932 | H-5 |

### 3-12. SCHEMATIC DIAGRAM — KEY SECTION —

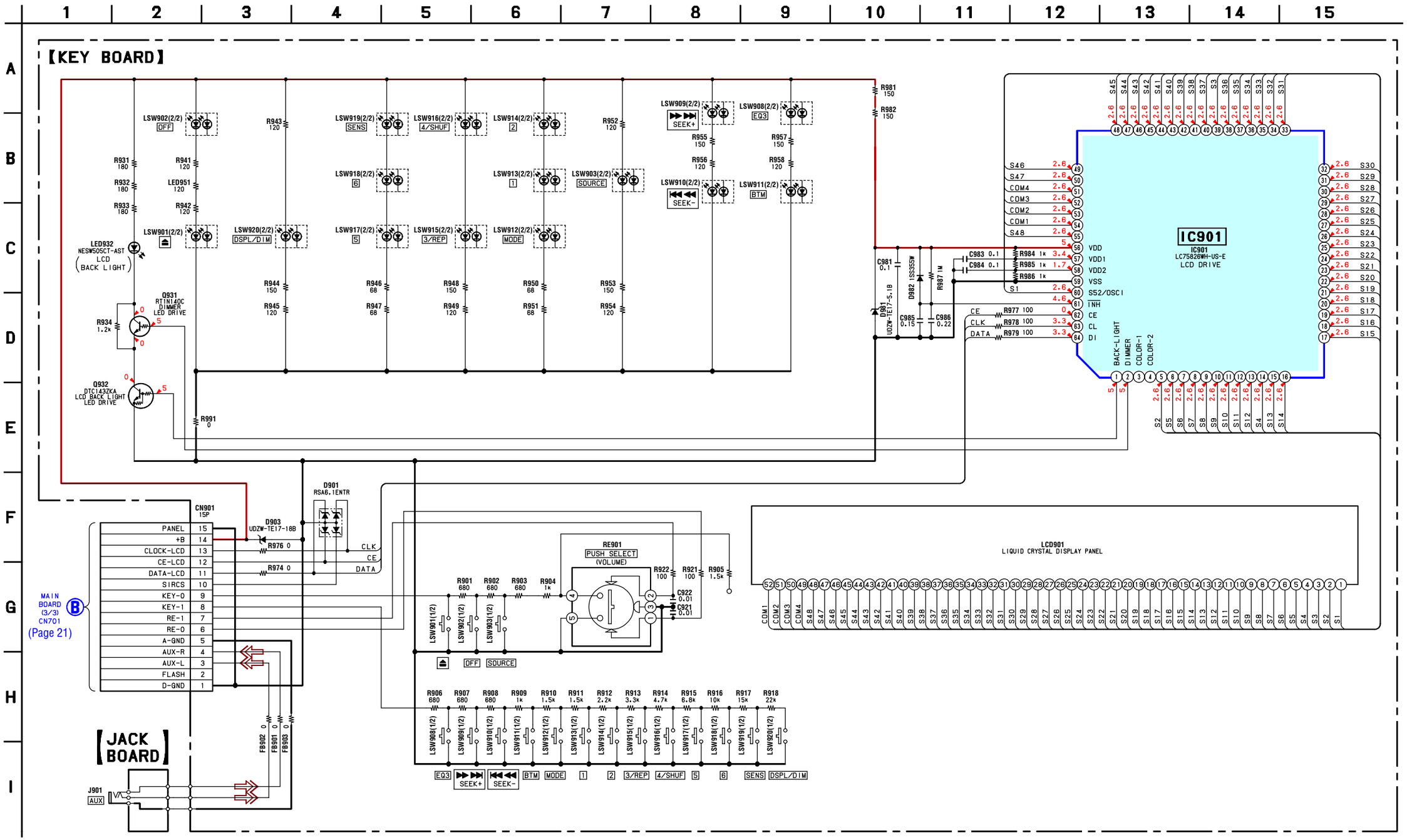

## • WAVEFORMS

### — SERVO Board — (CD PLAY)

① IC1 ㉓ (XTAL)

0.2 V/DIV, 0.2 µsec/DIV

② IC1 ㊼ (AGCI)

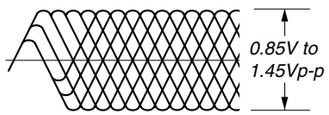


0.5 V/DIV, 0.5 µsec/DIV

③ IC1 ㉝ (FEO)

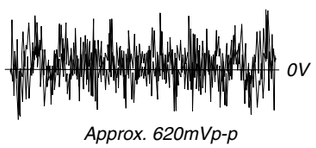


200 mV/DIV, 5 msec/DIV

④ IC1 ㊻ (TEO)

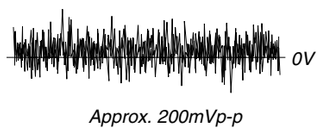


50 mV/DIV, 5 msec/DIV

### — MAIN Board —

① IC501 ㊽ (XIN)

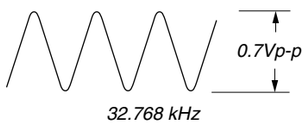


0.2 V/DIV, 0.1 µsec/DIV

② IC501 ㊷ (OSC IN)

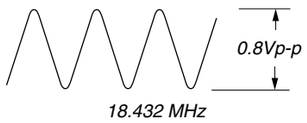


1 V/DIV, 0.1 µsec/DIV

## • IC BLOCK DIAGRAMS

### IC2 BA5966FP-FE2 (SERVO Board)

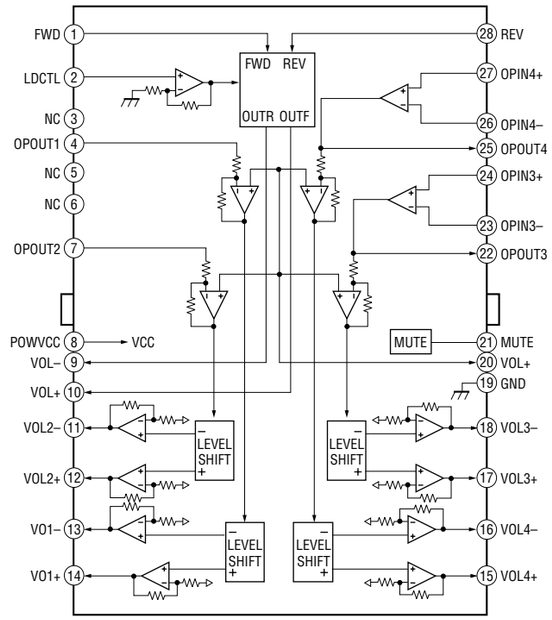

## IC401 BD3806AFS-E2 (MAIN Board (1/3))

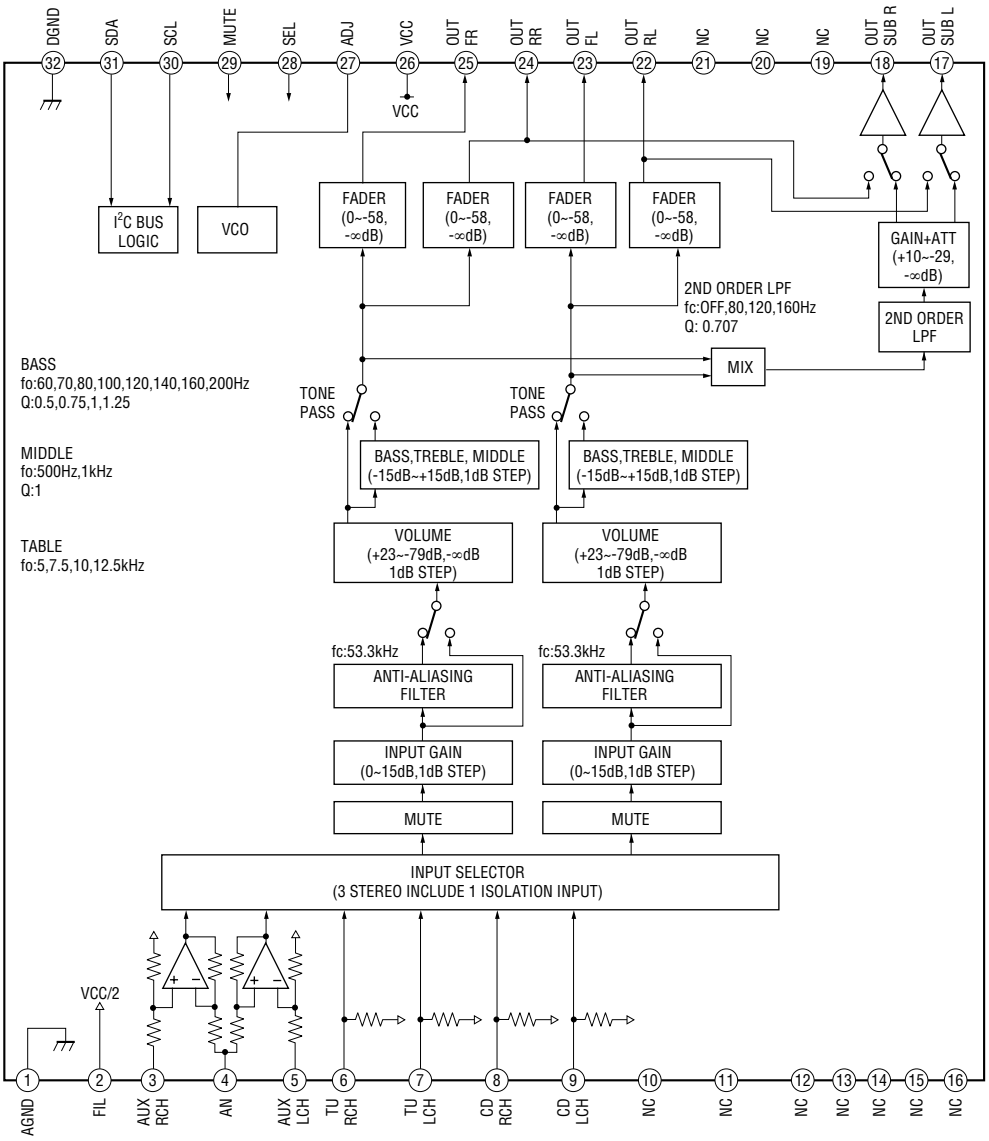

## IC750 TDA8589BJ/N2/R1 (MAIN Board (2/3))

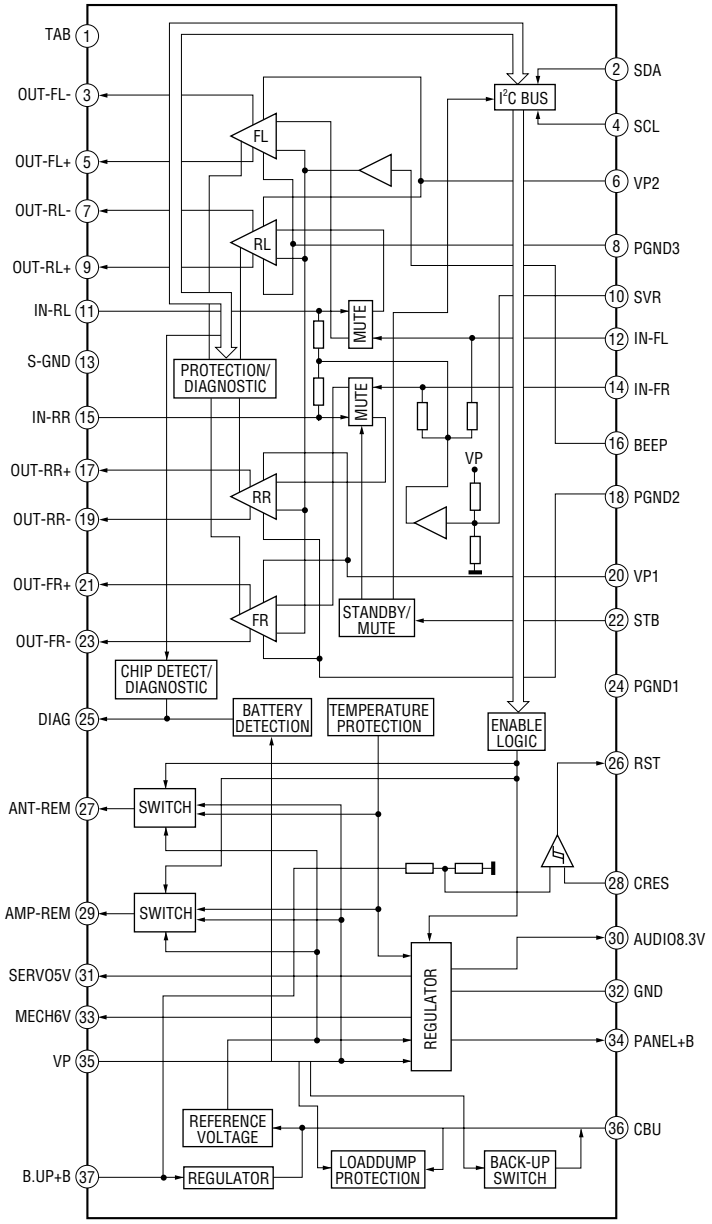

## • IC PIN DESCRIPTIONS

**IC1 μPD63712GC-8EU-A (RF AMP, DIGITAL SERVO, DIGITAL SIGNAL PROCESSOR) (SERVO BOARD)**

| Pin No. | Pin Name | I/O | Pin Description |
|---|---|---|---|
| 1 | LD | O | Laser diode ON/OFF control signal output (L: laser OFF, H: laser ON) |
| 2 | PD | I | Dimmer monitor input from optical pick-up laser diode. |
| 3 | PN | I | Not used. (Fixed at L in this set.) |
| 4 | AVDD | — | Analog power supply pin (+3.3 V) |
| 5 | DGND | — | Ground pin |
| 6 | RFOK | O | RFOK signal output to system control IC. |
| 7 | INTQ | O | CD text pack synchronization signal output to system control IC. |
| 8 | $\overline{RST}$ | I | CD reset signal input from system control IC. |
| 9 | $\overline{A0}$ | I | Command/parameter discrimination signal input from system control IC. (L: command transmission, H: parameter transmission) |
| 10 | $\overline{STB}$ | I | Data strobe signal input from system control IC. |
| 11 | $\overline{SCK}$ | I | Serial clock signal input from system control IC. |
| 12 | SO | O | Serial data signal output to system control IC. |
| 13 | SI | I | Serial data signal input from system control IC. |
| 14 | DVDD | — | Power supply pin (+3.3 V) |
| 15 | DAVDD | — | D/A converter power supply (+) pin (+3.3 V) |
| 16 | ROUT | O | Analog audio signal output (R-ch) |
| 17 | DAGND | — | Ground pin |
| 18 | REGC | — | Capacitor connection pin for SCF regulator. |
| 19 | DAGND | — | Ground pin |
| 20 | LOUT | O | Analog audio signal output (L-ch) |
| 21 | DAVDD | — | D/A converter power supply (+) pin (+3.3 V) |
| 22 | XVDD | — | Power supply pin (+3.3 V) |
| 23 | $\overline{XTAL}$ | O | Main system clock output (16.9344 MHz) |
| 24 | XTAL | I | Main system clock input (16.9344 MHz) |
| 25 | XGND | — | Ground pin |
| 26 | DVDD | — | Power supply pin (+3.3 V) |
| 27 | C1D1/FZD | O | Not used. (Open) |
| 28 | C1D2/TZD | O | Not used. (Open) |
| 29 | C2D1/RMUTE | O | CD R-ch data zero detection signal output |
| 30 | C2D2/LMUTE | O | CD L-ch data zero detection signal output |
| 31 | C2D3/SHOCK/SBSY | O | Not used. (Open) |
| 32 | LOCK/FR | O | Not used. (Open) |
| 33 | WFCK/MIRR | O | Not used. (Open) |
| 34 | RFCK/HOLD | O | Not used. (Open) |
| 35 | PLCK | O | Not used. (Open) |
| 36 | C16M | O | Not used. (Open) |
| 37 | DGND | — | Ground pin |
| 38 | TX | O | Not used. (Open) |
| 39 | EMPH/RAMOVER | O | Not used. (Open) |
| 40 | FLAG | O | Not used. (Open) |
| 41 | DVDD | — | Power supply pin (+3.3 V) |
| 42 | LIMIT | I | Not used. (Fixed at L in this set.) |
| 43 | $\overline{XTALEN}$ | I | Oscillation circuit ON/OFF control signal input (L: ON, H: OFF) (Fixed at L in this set.) |
| 44 | DGND | — | Ground pin |
| 45 | DIN | I | Not used. (Connect to DOUT in this set.) |
| 46 | DOUT | O | Not used. (Connect to DIN in this set.) |

| Pin No. | Pin Name | I/O | Pin Description |
|---|---|---|---|
| 47 | SCKIN | I | Not used. (Connect to SCKO in this set.) |
| 48 | SCKO | O | Not used. (Connect to SCKIN in this set.) |
| 49 | LRCKIN | I | Not used. (Connect to LRCK in this set.) |
| 50 | LRCK | O | Not used. (Connect to LRCKIN in this set.) |
| 51 | DVDD | — | Power supply pin (+3.3 V) |
| 52 | FD+ | O | Focus servo drive PWM signal output (+) |
| 53 | FD– | O | Focus servo drive PWM signal output (–) |
| 54 | TD+ | O | Tracking servo drive PWM signal output (+) |
| 55 | TD– | O | Tracking servo drive PWM signal output (–) |
| 56 | SD+ | O | Sled servo drive PWM signal output (+) |
| 57 | SD– | O | Sled servo drive PWM signal output (–) |
| 58 | MD+ | O | Spindle servo drive PWM signal output (+) |
| 59 | MD– | O | Spindle servo drive PWM signal output (–) |
| 60 | DGND | — | Ground pin |
| 61 | TESTEN | I | Test setting input (Fixed at L in this set.) |
| 62 to 66 | TEST4 to TEST0 | I | Test setting input (Fixed at L in this set.) |
| 67 | ADGND | — | A/D converter power supply (–) pin |
| 68 | EFM | O | EFM signal output |
| 69 | ASY | I | EFM comparator reference voltage input |
| 70 | ADVDD | — | A/D converter power supply pin (+3.3 V) |
| 71 | RFI | I | RF signal input for EFM data growing. |
| 72 | EQ2 | — | Not used. (Open) |
| 73 | EQ1 | — | RF amplifier equalizer parts connection pin |
| 74 | RF– | I | Not used. (Open) |
| 75 | RF2– | I | RF amplifier inversion input |
| 76 | AGCO | O | RF signal output after on AGC. |
| 77 | AGCI | I | RF AGC signal amplifier input |
| 78 | RFO | O | RF signal output before on AGC. |
| 79 | ATEST | I | Not used. (Open) |
| 80 | C3T | — | Capacitor connection pin for 3T detection. |
| 81 | AGND | — | Ground pin |
| 82 | A | I | Signal input (A) from optical pick-up detector. |
| 83 | C | I | Signal input (C) from optical pick-up detector. |
| 84 | B | I | Signal input (B) from optical pick-up detector. |
| 85 | D | I | Signal input (D) from optical pick-up detector. |
| 86 | F | I | Signal input (F) from optical pick-up detector. |
| 87 | E | I | Signal input (E) from optical pick-up detector. |
| 88 | VREFIN | I | Reference voltage (+1.65 V) input |
| 89 | AVDD | — | Analog power supply pin (+3.3 V) |
| 90 | REFOUT | O | Reference voltage (+1.65 V) output |
| 91 | REFC | — | Capacitor connection pin for reference voltage output. |
| 92 | FE– | I | Focus error signal amplifier inversion input |
| 93 | FEO | O | Focus error signal amplifier output |
| 94 | ADCIN | I | Not used. (Open) |
| 95 | TE– | I | Tracking error signal amplifier inversion input |
| 96 | TEO | O | Tracking error signal amplifier before output |
| 97 | TE2 | O | Tracking error signal amplifier after output |
| 98 | TEC | I | Tracking error signal comparator input |
| 99 | AGND | — | Ground pin |
| 100 | PWMSW | I | Not used. (Fixed at L in this set.) |

**IC501 MB90488BPF-G-186-AE1 (SYSTEM CONTROL) (MAIN BOARD (3/3))**

| Pin No. | Pin Name | I/O | Pin Description |
|---|---|---|---|
| 1 | AREASEL2 | I | Destination setting pin |
| 2 | AREASEL1 | I | Destination setting pin |
| 3 | AREASEL0 | I | Destination setting pin |
| 4 | COL SW | I | Illumination color select signal input |
| 5 | BEEP | O | Beep signal output |
| 6 | CYRIL SEL | I | Cyril select signal input Not used in this set. (Open) |
| 7 | $\overline{\text{NOSE SW}}$ | I | Front panel open/close detect signal input Not used in this set. |
| 8 | DIAG | I | Power AMP status signal input |
| 9 | $\overline{\text{VOL ATT}}$ | O | Electronic volume attenuate control signal output |
| 10 | NCO | O | Not used. (Open) |
| 11 | VSS | — | Ground pin |
| 12 | TU ATT | O | Tuner mute control signal output |
| 13 | NS MASK | O | Noise mask signal output Not used in this set. (Open) |
| 14 | ILLUMI SEL1 | I | Illumination voltage setting signal input 1 |
| 15 | ILLUMI SEL2 | I | Illumination voltage setting signal input 2 |
| 16, 17 | NCO | O | Not used. (Open) |
| 18 | CD SI | I | CD servo serial data signal input |
| 19 | CD SO | O | CD servo serial data signal output |
| 20 | CD SCK | O | CD servo serial clock signal output |
| 21, 22 | NCO | O | Not used. (Open) |
| 23 | VCC5 | — | Power supply pin (+3.3 V) |
| 24 | EEP SIO | I/O | EEPROM bus serial data input/output |
| 25 | EEP CKO | O | EEPROM bus serial clock output |
| 26 | $\overline{\text{AMP STB}}$ | O | Power AMP standby signal output |
| 27 | LCD CE | O | LCD driver chip enable signal output |
| 28 | LCD SO | O | LCD driver serial data signal output |
| 29 | LCD CKO | O | LCD driver serial clock signal output |
| 30 | RDS ON | O | RDS ON signal output Not used in this set. (Open) |
| 31 | RE IN0 | I | Rotary encoder signal input 0 |
| 32 | RE IN1 | I | Rotary encoder signal input 1 |
| 33 | I2C CKO | O | I2C bus serial clock signal output |
| 34 | I2C SIO | I/O | I2C bus serial data signal input/output |
| 35 | DAVDD | — | A/D converter power supply pin (+3.3 V) |
| 36 | AVRH | — | A/D converter external reference power supply pin (+3.3 V) |
| 37 | DAVSS | — | Ground pin |
| 38 | QUALITY | I | Noise detect signal input Not used in this set. |
| 39 | VSM | I | S-meter voltage detect signal input |
| 40 | KEY IN1 | I | Key signal input 1 |
| 41 | KEY IN0 | I | Key signal input 0 |
| 42 | VSS | — | Ground pin |
| 43 | RC IN0 | I | Rotary commander key signal input |
| 44 to 48 | NCO | O | Not used. (open) |
| 49 | MD0 | I | Operation mode setting pin (Connect to VDD.) |
| 50 | MD1 | I | Operation mode setting pin (Connect to VDD.) |
| 51 | MD2 | I | Operation mode setting pin (Connect to VSS.) |
| 52 | KEY ACK | I | Key acknowledgment detect signal input |
| 53 | TU ATT IN | I | Tuner mute zero cross detect signal input |
| 54 | BU IN | I | Back-up power supply detect signal input |
| 55 | CD INTQ | I | CD servo text pack synchronization signal input |

| Pin No. | Pin Name | I/O | Pin Description |
|---|---|---|---|
| 56 | DAVN | I | RDS data block synchronized detect signal input Not used in this set. |
| 57 | NCO | O | Not used. (Open) |
| 58 | UNISI | I | SONY bus data signal input Not used in this set. |
| 59 | UNI SO | O | SONY bus data signal output Not used in this set. (Open) |
| 60 | UNI SCK | O | SONY bus clock signal output Not used in this set. |
| 61 | 611 SEL | I | Mechanism deck select signal input Not used in this set. (Open) |
| 62 | WMA | I | WMA select signal input Not used in this set. (Open) |
| 63 | NCO | O | Not used. (Open) |
| 64 | SIRCS | I | Remote control signal input Not used in this set. |
| 65 to 67 | NCO | O | Not used. (Open) |
| 68 | FLASH W | I | Memory mode select signal input Not used in this set. |
| 69, 70 | NCO | O | Not used. (Open) |
| 71 | $\overline{\text{RC IN1}}$ | I | Rotary commander shift key signal input Not used in this set. |
| 72 | $\overline{\text{ACC IN}}$ | I | Accessory power supply detect signal input |
| 73 | $\overline{\text{TEST IN}}$ | I | Test mode detect signal input |
| 74 | TEL ATT | I | Telephone attenuate detect signal input Not used in this set. |
| 75 | NCO | O | Not used. (Open) |
| 76 | $\overline{\text{XKEY ON}}$ | O | A/D converter power supply control signal output |
| 77 | $\overline{\text{RESET}}$ | I | CPU reset signal input |
| 78 | NCO | O | Not used. (Open) |
| 79 | XOUT | O | Sub-clock output (32.768 kHz) |
| 80 | XIN | I | Sub-clock input (32.768 kHz) |
| 81 | VSS1 | — | Ground pin |
| 82 | OSC IN | I | Main-clock input (18.432 MHz) |
| 83 | OSC OUT | O | Main-clock output (18.432 MHz) |
| 84 | VCC3 | — | Power supply pin (+3.3 V) |
| 85 | DEMOSEL | I | DEMO select signal input |
| 86 | ATT | O | Audio mute control signal output |
| 87 | $\overline{\text{BUS ON}}$ | O | Bus on signal output |
| 88 | $\overline{\text{SYS RST}}$ | O | System reset signal output |
| 89 | CD RFOK | O | Shutter open information signal output to CD mechanism |
| 90 | CD RST | O | CD servo reset signal output |
| 91 | CD A0 | O | CD servo command/parameter signal output |
| 92 | CD STB | O | CD servo data strob signal output |
| 93 | CD MUTE R | I | CD mechanism zero cross mute detect signal input R |
| 94 | CD MUTE L | I | CD mechanism zero cross mute detect signal input L |
| 95 | CD INSW | I | CD mechanism disc in switch detect signal input |
| 96 | CD SELFSW | I | CD self switch signal input |
| 97 | CD LM LO | O | CD mechanism loading motor (+6 V) control signal output |
| 98 | CD LM EJ | O | CD mechanism eject motor control signal output |
| 99 | CD DSW | I | CD mechanism disc in switch detect signal input |
| 100 | CD LIMIT | I | CD mechanism limit switch detect signal input |

# SECTION 4
# EXPLODED VIEWS

**NOTE:**

- The mechanical parts with no reference number in the exploded views are not supplied.
- Items marked "*" are not stocked since they are seldom required for routine service. Some delay should be anticipated when ordering these items.
- -XX and -X mean standardized parts, so they may have some difference from the original one.
- Color Indication of Appearance Parts
  Example :
  KNOB, BALANCE (WHITE) ... (RED)
  ↑ Parts Color ↑ Cabinet's Color
- Accessories are given in the last of this parts list.

The components identified by mark ⚠ or dotted line with mark ⚠ are critical for safety. Replace only with part number specified.

## 4-1. MAIN SECTION

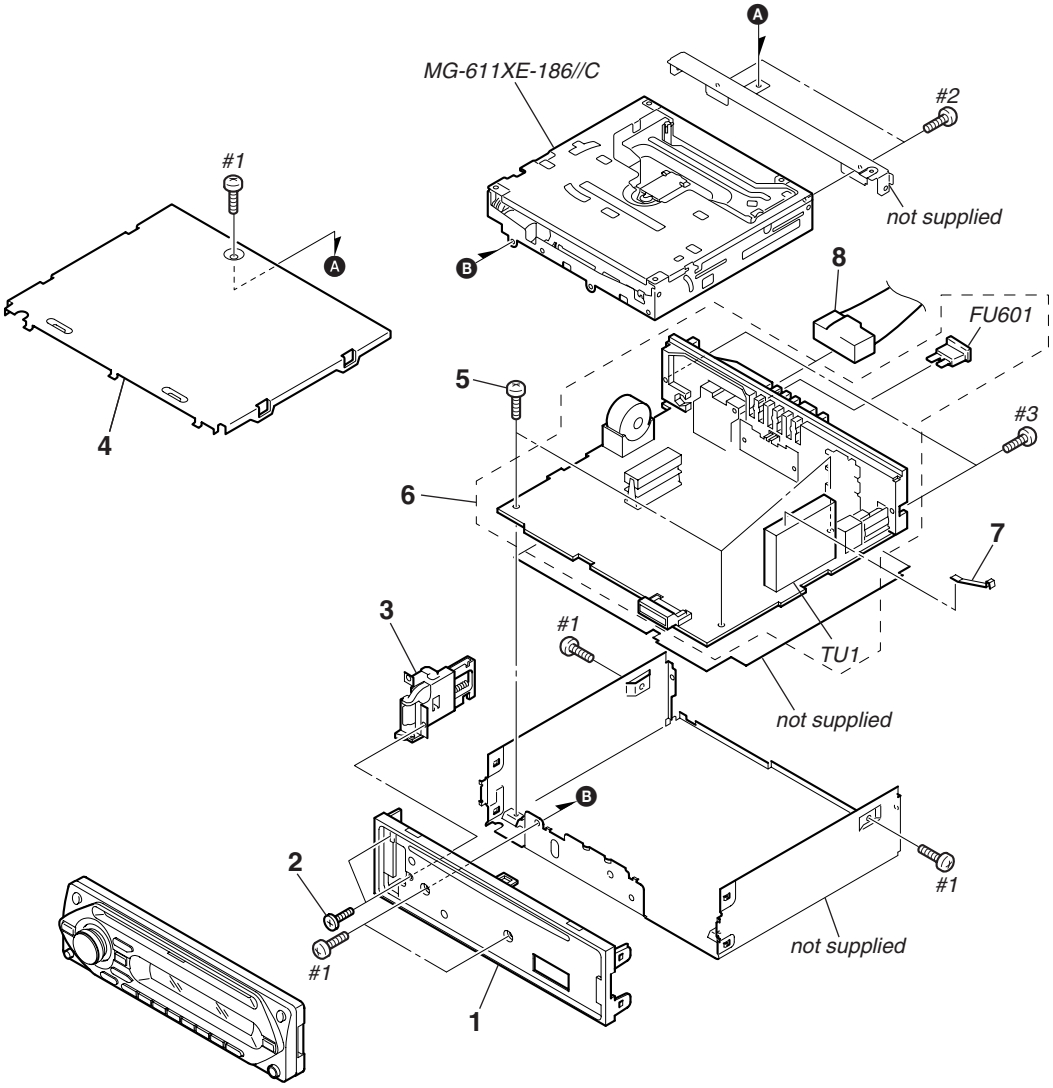


| Ref. No. | Part No. | Description | Remark |
|---|---|---|---|
| 1 | X-2067-566-1 | PANEL ASSY, SUB | |
| 2 | 2-583-939-01 | SCREW (+B 2X4) | |
| 3 | X-2055-203-2 | LOCK ASSY (S) | |
| 4 | 3-246-006-31 | COVER | |
| 5 | 2-583-940-01 | SCREW +BTT 2.6X5 | |
| 6 | A-1206-054-A | MAIN BOARD, COMPLETE | |
| 7 | 2-345-298-01 | PLATE (TU), GROUND | |
| 8 | 1-776-206-21 | CORD (WITH CONNECTOR) (POWER) | |
| FU601 | 1-532-877-11 | FUSE (BLADE TYPE) (AUTO FUSE) 10A | |
| TU1 | A-3220-961-B | TUNER UNIT (TUX-032) | |
| #1 | 7-685-792-09 | SCREW +PTT 2.6X6 (S) | |
| #2 | 7-685-790-01 | SCREW +PTT 2.6X4 (S) | |
| #3 | 7-685-793-09 | SCREW +PTT 2.6X8 (S) | |

## 4-2. FRONT PANEL SECTION

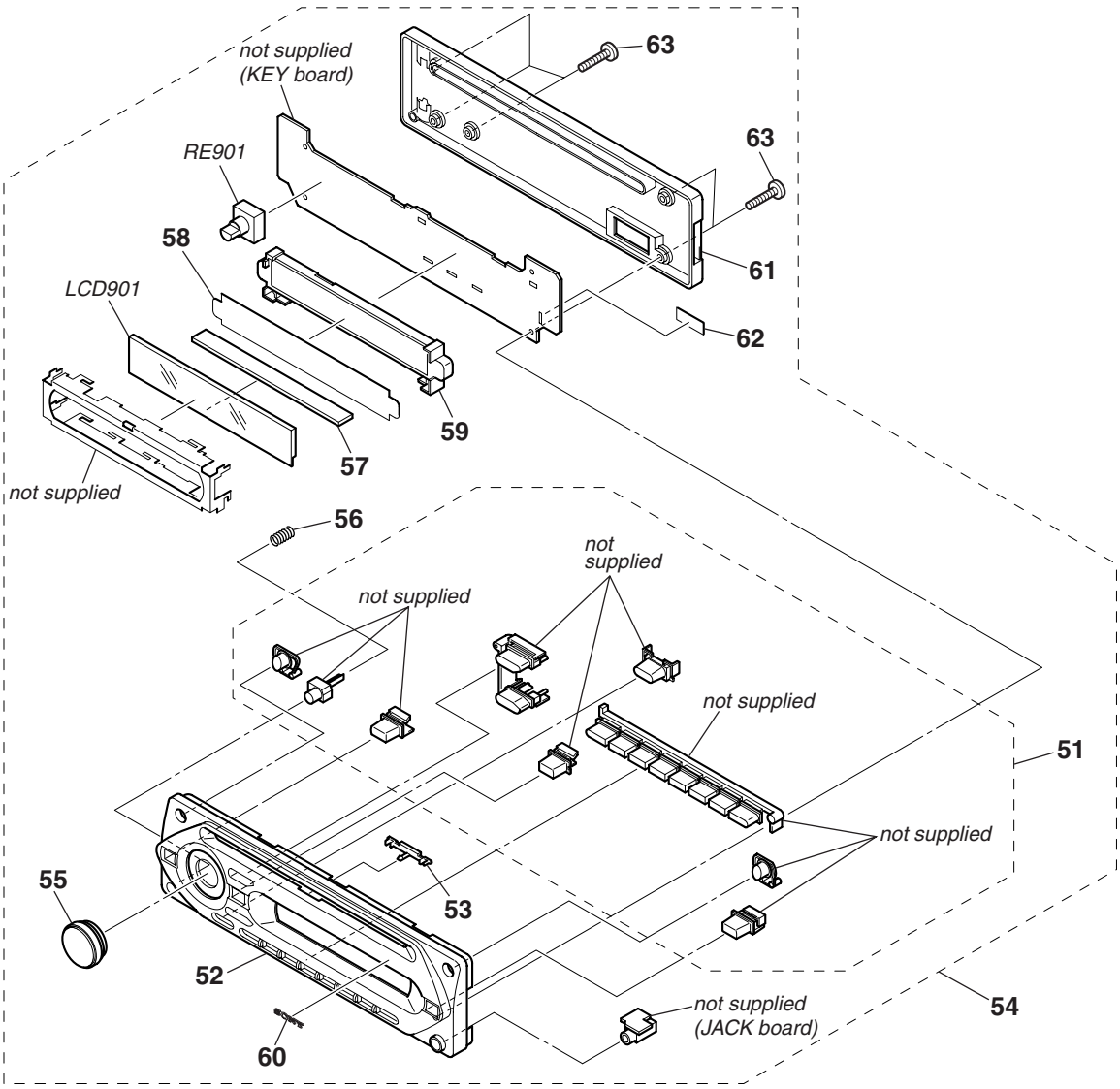


| Ref. No. | Part No. | Description | Remark |
|---|---|---|---|
| 51 | X-2067-579-1 | BUTTON ASSY (S) | |
| 52 | X-2149-325-1 | PANEL SUB ASSY, FRONT | |
| 53 | 2-631-526-11 | PLATE (CD), LIGHT GUIDE | |
| 54 | A-1206-099-A | PANEL ASSY, FRONT | |
| 55 | X-2102-729-1 | KNOB (VOL) (SV) ASSY | |
| 56 | 2-349-626-01 | SPRING (RELEASE) | |
| 57 | 1-780-199-11 | CONDUCTIVE BOARD, CONNECTION | |
| 58 | 2-634-438-01 | ILLUMINATOR (LCD) | |
| 59 | X-2067-569-1 | HOLDER (LCD) ASSY | |
| 60 | 3-251-320-01 | EMBLEM (NO. 2.5), SONY | |
| 61 | 2-631-511-04 | PANEL, FRONT BACK | |
| 62 | 3-040-315-01 | COVER (AC OUT) | |
| 63 | 3-250-543-91 | SCREW (+B P-TITE M2) | |
| LCD901 | 1-805-920-11 | DISPLAY PANEL, LIQUID CRYSTAL | |
| RE901 | 1-478-474-12 | ENCODER, ROTARY (PUSH SELECT/VOLUME) | |

## 4-3. CD MECHANISM SECTION (1) (MG-611XE-186//C)

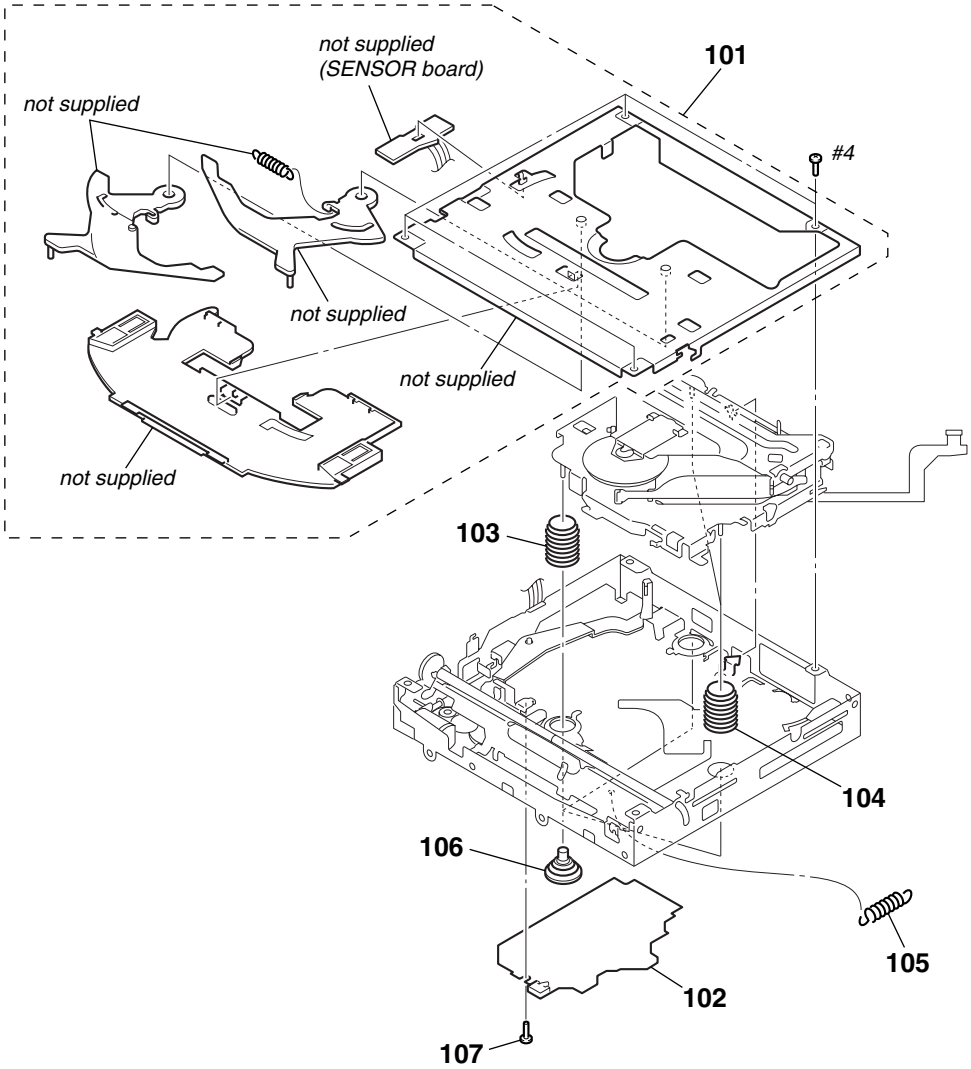


| Ref. No. | Part No. | Description | Remark | Ref. No. | Part No. | Description | Remark |
|---|---|---|---|---|---|---|---|
| 101 | A-1088-624-A | CHASSIS (T) SUB ASSY | | 105 | 2-345-767-21 | SPRING (KF60), TENSION | |
| 102 | A-1083-497-A | SERVO BOARD, COMPLETE | | 106 | 3-253-748-11 | DAMPER (S) | |
| 103 | 2-345-865-11 | SPRING (DAMPER), COMPRESSION (BLACK) | | 107 | 3-352-758-31 | SCREW (M1.7X2.5), TOOTHED LOCK | |
| 104 | 2-345-865-01 | SPRING (DAMPER), COMPRESSION (NATURAL) | | #4 | 7-627-552-87 | SCREW, PRECISION +P 1.7X2.2 | |

## 4-4. CD MECHANISM SECTION (2) (MG-611XE-186//C)

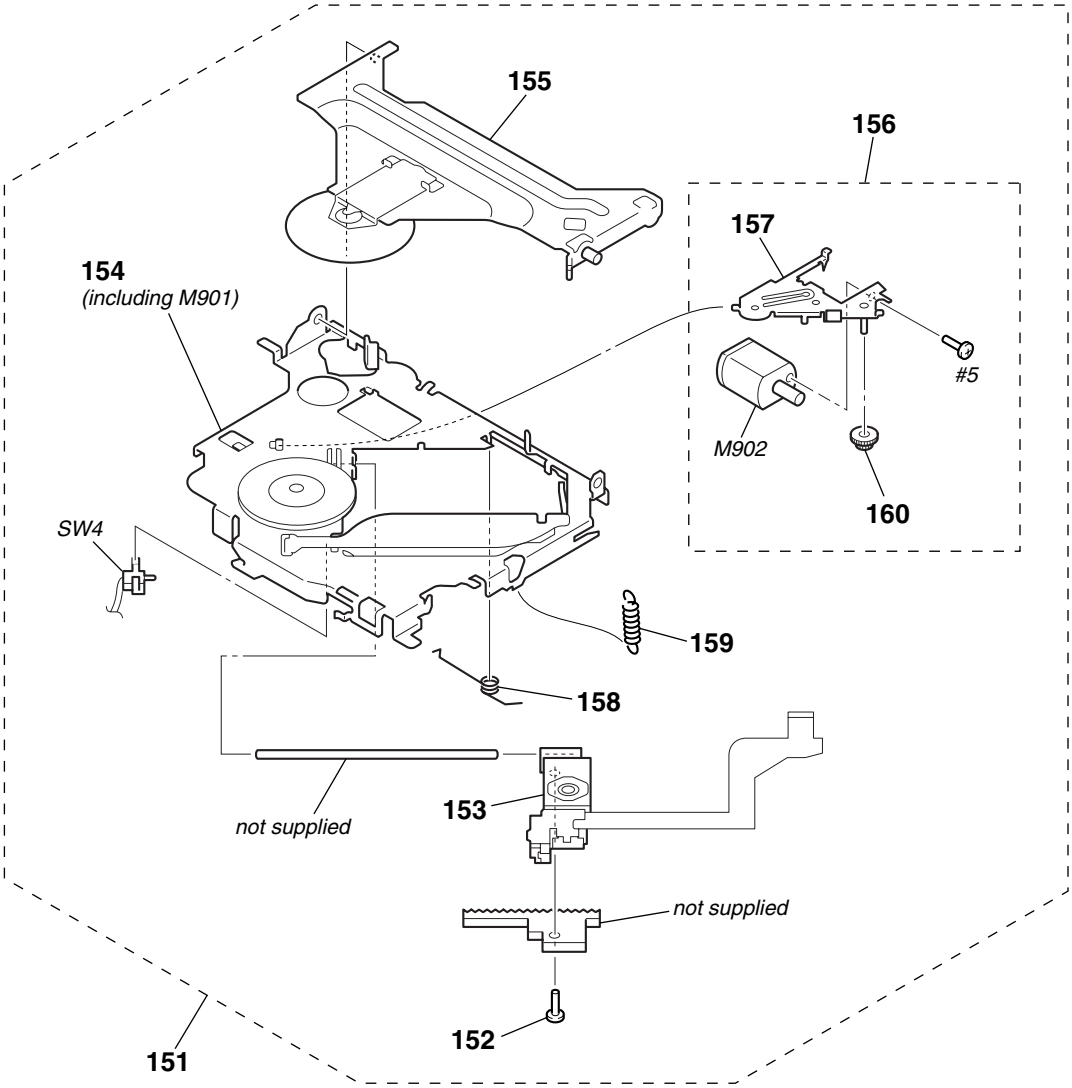


| Ref. No. | Part No. | Description | Remark |
|---|---|---|---|
| 151 | A-1088-612-A | CHASSIS (OP) COMPLETE ASSY | |
| 152 | 3-316-938-91 | SCREW (B1.4X5), TAPPING | |
| ⚠153 | 8-820-207-12 | OPTICAL PICK-UP (KSS1000E/K1RP) | |
| 154 | A-1088-615-A | CHASSIS (OP) SUB ASSY (including M901) | |
| 155 | A-1088-616-A | ARM SUB ASSY, CHUCKING | |
| 156 | A-1088-613-A | LEVER (SL) SUB ASSY | |
| 157 | X-2024-784-3 | LEVER (SL) ASSY | |

| Ref. No. | Part No. | Description | Remark |
|---|---|---|---|
| 158 | 3-261-959-21 | SPRING (SL), TORSION | |
| 159 | 3-253-736-21 | SPRING (CHKG), TENSION | |
| 160 | 3-253-742-21 | WHEEL (SL), WORM | |
| M902 | A-1088-614-A | MOTOR ASSY, SL (SLED) | |
| SW4 | 1-786-339-11 | SWITCH (M) (LIMIT) | |
| #5 | 7-627-850-77 | SCREW, PRECISION +P 1.4X1.8 | |

## 4-5. CD MECHANISM SECTION (3) (MG-611XE-186//C)

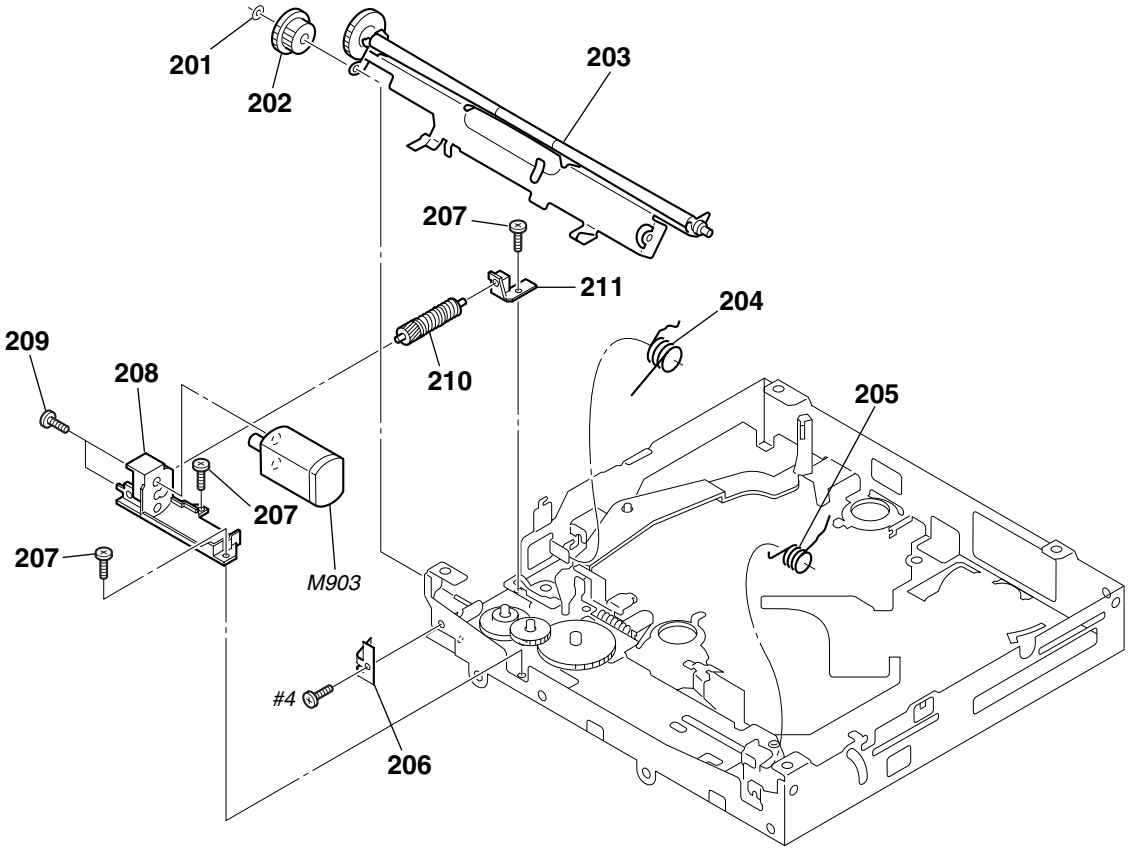


| Ref. No. | Part No. | Description | Remark |
|---|---|---|---|
| 201 | 3-262-755-11 | WASHER (1.1-2.5) | |
| 202 | 2-186-699-21 | GEAR (RA1) | |
| 203 | A-1088-618-A | ARM ASSY, ROLLER | |
| 204 | 3-259-455-21 | SPRING (RAL) | |
| 205 | 3-253-713-21 | SPRING (RAR) | |
| 206 | 3-259-469-21 | SPRING (LE), LEAF | |
| 207 | 2-134-636-51 | SCREW (M1.7X2.5) | |
| 208 | 2-186-696-22 | BRACKET (LEM-N) | |
| 209 | 3-345-648-91 | SCREW (M1.4), TOOTHED LOCK | |
| 210 | A-1088-623-A | GEAR (LE) ASSY | |
| 211 | 2-186-697-21 | BEARING (LEB-N) | |
| M903 | A-1088-622-A | MOTOR ASSY, LE (LOADING) | |
| #4 | 7-627-552-87 | SCREW, PRECISION +P 1.7X2.2 | |

## 4-6. CD MECHANISM SECTION (4) (MG-611XE-186//C)

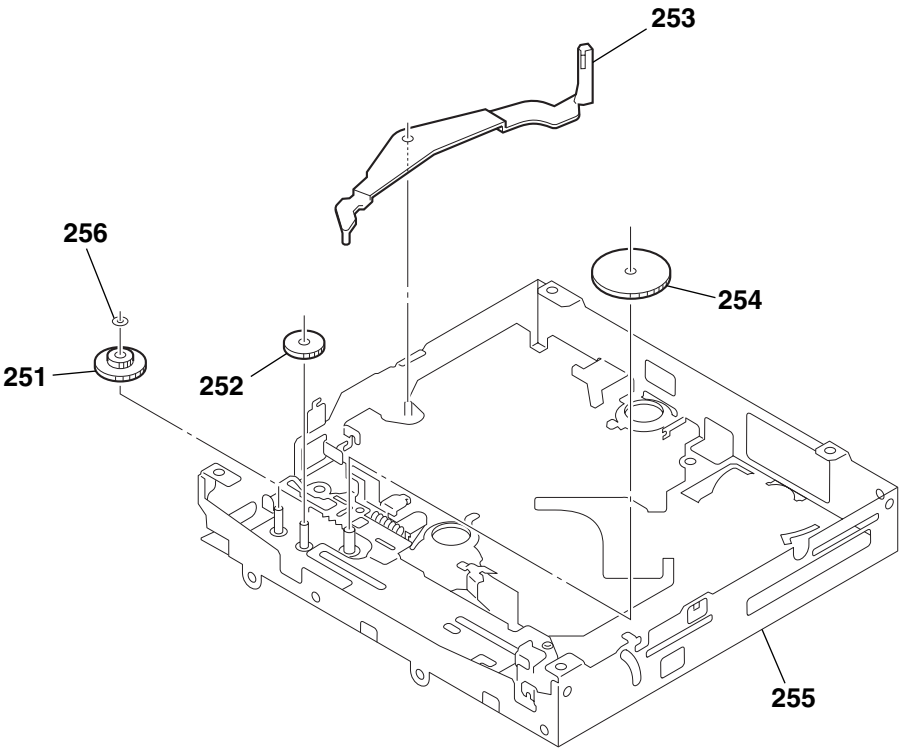


| Ref. No. | Part No. | Description | Remark | Ref. No. | Part No. | Description | Remark |
|---|---|---|---|---|---|---|---|
| 251 | 2-186-700-21 | GEAR (CHK1) | | 254 | 2-590-545-22 | GEAR (LE2-M) | |
| 252 | 3-259-470-24 | GEAR (LE1) | | 255 | A-1088-620-A | CHASSIS (M) BLOCK ASSY | |
| 253 | 3-253-755-23 | LEVER (D) | | 256 | 3-262-755-11 | WASHER (1.1-2.5) | |

# SECTION 5
# ELECTRICAL PARTS LIST

JACK KEY

**NOTE:**

- Due to standardization, replacements in the parts list may be different from the parts specified in the diagrams or the components used on the set.
- -XX and -X mean standardized parts, so they may have some difference from the original one.
- RESISTORS
  All resistors are in ohms.
  METAL:Metal-film resistor.
  METAL OXIDE: Metal oxide-film resistor.
  F:nonflammable
- Items marked "*" are not stocked since they are seldom required for routine service. Some delay should be anticipated when ordering these items.
- SEMICONDUCTORS
  In each case, u : µ, for example:
  uA.. : µA.. uPA.. : µPA..
  uPB.. : µPB.. uPC.. : µPC.. uPD.. : µPD..
- CAPACITORS
  uF : µF
- COILS
  uH : µH

The components identified by mark ⚠ or dotted line with mark. ⚠ are critical for safety. Replace only with part number specified.

When indicating parts by reference number, please include the board.

| Ref. No. | Part No. | Description | | | Remark |
|---|---|---|---|---|---|
| | | JACK BOARD | | | |
| | | ********** | | | |
| | | < JACK > | | | |
| J901 | 1-819-732-11 | JACK (DIA. 3.5) (AUX) | | | |
| | | KEY BOARD | | | |
| | | ********** | | | |
| | | < CAPACITOR > | | | |
| C921 | 1-163-031-11 | CERAMIC CHIP | 0.01uF | | 50V |
| C922 | 1-163-031-11 | CERAMIC CHIP | 0.01uF | | 50V |
| C981 | 1-107-826-11 | CERAMIC CHIP | 0.1uF | 10% | 16V |
| C983 | 1-107-826-11 | CERAMIC CHIP | 0.1uF | 10% | 16V |
| C984 | 1-107-826-11 | CERAMIC CHIP | 0.1uF | 10% | 16V |
| C985 | 1-131-664-11 | CERAMIC CHIP | 0.15uF | 10% | 10V |
| C986 | 1-127-715-11 | CERAMIC CHIP | 0.22uF | 10% | 16V |
| | | < CONNECTOR > | | | |
| CN901 | 1-819-758-12 | PLUG, CONNECTOR 15P | | | |
| | | < DIODE > | | | |
| D901 | 6-500-886-01 | DIODE RSA6.1ENTR | | | |
| D903 | 6-501-180-01 | DIODE UDZW-TE17-18B | | | |
| D981 | 6-501-167-01 | DIODE UDZW-TE17-5.1B | | | |
| D982 | 6-501-193-01 | DIODE 1SS355WTE-17 | | | |
| | | < JUMPER RESISTOR > | | | |
| FB901 | 1-216-864-11 | SHORT CHIP | 0 | | |
| FB902 | 1-216-864-11 | SHORT CHIP | 0 | | |
| FB903 | 1-216-295-11 | SHORT CHIP | 0 | | |
| | | < IC > | | | |
| IC901 | 6-707-063-01 | IC LC75826WH-US-E | | | |
| | | < DIODE > | | | |
| LED932 | 6-501-339-01 | LED NESW505CT-AST (LCD BACK LIGHT) | | | |
| | | < RESISTOR > | | | |
| LED951 | 1-216-810-11 | METAL CHIP | 120 | 5% | 1/10W |

| Ref. No. | Part No. | Description | | | Remark |
|---|---|---|---|---|---|
| | | < SWITCH > | | | |
| LSW901 | 1-786-806-12 | SWITCH, TACTILE (WITH LED) (⏏) | | | |
| LSW902 | 1-786-806-12 | SWITCH, TACTILE (WITH LED) (OFF) | | | |
| LSW903 | 1-786-806-12 | SWITCH, TACTILE (WITH LED) (SOURCE) | | | |
| LSW908 | 1-786-806-12 | SWITCH, TACTILE (WITH LED) (EQ3) | | | |
| LSW909 | 1-786-806-12 | SWITCH, TACTILE (WITH LED) (▶▶ ▶▶I SEEK +) | | | |
| LSW910 | 1-786-806-12 | SWITCH, TACTILE (WITH LED) (I◀◀ ◀◀ SEEK –) | | | |
| LSW911 | 1-786-806-12 | SWITCH, TACTILE (WITH LED) (BTM) | | | |
| LSW912 | 1-786-806-12 | SWITCH, TACTILE (WITH LED) (MODE) | | | |
| LSW913 | 1-786-806-12 | SWITCH, TACTILE (WITH LED) (1) | | | |
| LSW914 | 1-786-806-12 | SWITCH, TACTILE (WITH LED) (2) | | | |
| LSW915 | 1-786-806-12 | SWITCH, TACTILE (WITH LED) (3/REP) | | | |
| LSW916 | 1-786-806-12 | SWITCH, TACTILE (WITH LED) (4/SHUF) | | | |
| LSW917 | 1-786-806-12 | SWITCH, TACTILE (WITH LED) (5) | | | |
| LSW918 | 1-786-806-12 | SWITCH, TACTILE (WITH LED) (6) | | | |
| LSW919 | 1-786-806-12 | SWITCH, TACTILE (WITH LED) (SENS) | | | |
| LSW920 | 1-786-806-12 | SWITCH, TACTILE (WITH LED) (DSPL/DIM) | | | |
| | | < TRANSISTOR > | | | |
| Q931 | 8-729-027-44 | TRANSISTOR DTC114TKA-T146 | | | |
| Q932 | 8-729-027-58 | TRANSISTOR DTC143ZKA-T146 | | | |
| | | < RESISTOR > | | | |
| R901 | 1-216-819-11 | METAL CHIP | 680 | 5% | 1/10W |
| R902 | 1-216-819-11 | METAL CHIP | 680 | 5% | 1/10W |
| R903 | 1-216-819-11 | METAL CHIP | 680 | 5% | 1/10W |
| R904 | 1-216-821-11 | METAL CHIP | 1K | 5% | 1/10W |
| R905 | 1-216-823-11 | METAL CHIP | 1.5K | 5% | 1/10W |
| R906 | 1-216-819-11 | METAL CHIP | 680 | 5% | 1/10W |
| R907 | 1-216-819-11 | METAL CHIP | 680 | 5% | 1/10W |
| R908 | 1-216-819-11 | METAL CHIP | 680 | 5% | 1/10W |
| R909 | 1-216-821-11 | METAL CHIP | 1K | 5% | 1/10W |
| R910 | 1-216-823-11 | METAL CHIP | 1.5K | 5% | 1/10W |
| R911 | 1-216-823-11 | METAL CHIP | 1.5K | 5% | 1/10W |
| R912 | 1-216-825-11 | METAL CHIP | 2.2K | 5% | 1/10W |
| R913 | 1-216-827-11 | METAL CHIP | 3.3K | 5% | 1/10W |
| R914 | 1-216-829-11 | METAL CHIP | 4.7K | 5% | 1/10W |
| R915 | 1-218-867-11 | METAL CHIP | 6.8K | 0.5% | 1/10W |
| R916 | 1-216-833-11 | METAL CHIP | 10K | 5% | 1/10W |
| R917 | 1-216-835-11 | METAL CHIP | 15K | 5% | 1/10W |
| R918 | 1-216-837-11 | METAL CHIP | 22K | 5% | 1/10W |
| R921 | 1-216-025-11 | RES-CHIP | 100 | 5% | 1/10W |

KEY MAIN

| Ref. No. | Part No. | Description | | | Remark |
|---|---|---|---|---|---|
| R922 | 1-216-025-11 | RES-CHIP | 100 | 5% | 1/10W |
| R931 | 1-216-812-11 | METAL CHIP | 180 | 5% | 1/10W |
| R932 | 1-216-812-11 | METAL CHIP | 180 | 5% | 1/10W |
| R933 | 1-216-812-11 | METAL CHIP | 180 | 5% | 1/10W |
| R934 | 1-216-822-11 | METAL CHIP | 1.2K | 5% | 1/10W |
| R941 | 1-216-810-11 | METAL CHIP | 120 | 5% | 1/10W |
| R942 | 1-216-810-11 | METAL CHIP | 120 | 5% | 1/10W |
| R943 | 1-216-810-11 | METAL CHIP | 120 | 5% | 1/10W |
| R944 | 1-216-811-11 | METAL CHIP | 150 | 5% | 1/10W |
| R945 | 1-216-810-11 | METAL CHIP | 120 | 5% | 1/10W |
| R946 | 1-216-807-11 | METAL CHIP | 68 | 5% | 1/10W |
| R947 | 1-216-807-11 | METAL CHIP | 68 | 5% | 1/10W |
| R948 | 1-216-811-11 | METAL CHIP | 150 | 5% | 1/10W |
| R949 | 1-216-810-11 | METAL CHIP | 120 | 5% | 1/10W |
| R950 | 1-216-807-11 | METAL CHIP | 68 | 5% | 1/10W |
| R951 | 1-216-807-11 | METAL CHIP | 68 | 5% | 1/10W |
| R952 | 1-216-810-11 | METAL CHIP | 120 | 5% | 1/10W |
| R953 | 1-216-811-11 | METAL CHIP | 150 | 5% | 1/10W |
| R954 | 1-216-810-11 | METAL CHIP | 120 | 5% | 1/10W |
| R955 | 1-216-811-11 | METAL CHIP | 150 | 5% | 1/10W |
| R956 | 1-216-810-11 | METAL CHIP | 120 | 5% | 1/10W |
| R957 | 1-216-811-11 | METAL CHIP | 150 | 5% | 1/10W |
| R958 | 1-216-810-11 | METAL CHIP | 120 | 5% | 1/10W |
| R974 | 1-216-864-11 | SHORT CHIP | 0 | | |
| R976 | 1-216-864-11 | SHORT CHIP | 0 | | |
| R977 | 1-216-809-11 | METAL CHIP | 100 | 5% | 1/10W |
| R978 | 1-216-809-11 | METAL CHIP | 100 | 5% | 1/10W |
| R979 | 1-216-809-11 | METAL CHIP | 100 | 5% | 1/10W |
| R981 | 1-216-811-11 | METAL CHIP | 150 | 5% | 1/10W |
| R982 | 1-216-811-11 | METAL CHIP | 150 | 5% | 1/10W |
| R984 | 1-216-821-11 | METAL CHIP | 1K | 5% | 1/10W |
| R985 | 1-216-821-11 | METAL CHIP | 1K | 5% | 1/10W |
| R986 | 1-216-821-11 | METAL CHIP | 1K | 5% | 1/10W |
| R987 | 1-216-857-11 | METAL CHIP | 1M | 5% | 1/10W |
| R991 | 1-216-864-11 | SHORT CHIP | 0 | | |

**********

| | | | | | |
|---|---|---|---|---|---|
| | A-1206-054-A | MAIN BOARD, COMPLETE | | | |
| | | ********** | | | |
| | 7-621-284-40 | SCREW +P 2.6X10 | | | |
| | 7-685-134-19 | SCREW +P 2.6X8 TYPE2 NON-SLIT | | | |
| | 7-685-793-09 | SCREW +PTT 2.6X8 (S) | | | |
| | 7-685-795-09 | SCREW +PTT 2.6X12 (S) | | | |
| | | < CAPACITOR > | | | |
| C4 | 1-126-947-11 | ELECT | 47uF | 20% | 35V |
| C5 | 1-126-947-11 | ELECT | 47uF | 20% | 35V |
| C6 | 1-162-970-11 | CERAMIC CHIP | 0.01uF | 10% | 25V |
| C7 | 1-162-970-11 | CERAMIC CHIP | 0.01uF | 10% | 25V |
| C12 | 1-162-970-11 | CERAMIC CHIP | 0.01uF | 10% | 25V |
| C13 | 1-162-970-11 | CERAMIC CHIP | 0.01uF | 10% | 25V |
| C301 | 1-128-551-11 | ELECT | 22uF | 20% | 63V |
| C302 | 1-104-665-11 | ELECT | 100uF | 20% | 25V |
| C303 | 1-128-551-11 | ELECT | 22uF | 20% | 63V |
| C305 | 1-104-665-11 | ELECT | 100uF | 20% | 25V |
| C306 | 1-162-970-11 | CERAMIC CHIP | 0.01uF | 10% | 25V |
| C307 | 1-162-970-11 | CERAMIC CHIP | 0.01uF | 10% | 25V |
| C308 | 1-162-970-11 | CERAMIC CHIP | 0.01uF | 10% | 25V |
| C343 | 1-162-970-11 | CERAMIC CHIP | 0.01uF | 10% | 25V |

| Ref. No. | Part No. | Description | | | Remark |
|---|---|---|---|---|---|
| C401 | 1-126-964-11 | ELECT | 10uF | 20% | 50V |
| C404 | 1-127-715-11 | CERAMIC CHIP | 0.22uF | 10% | 16V |
| C405 | 1-127-715-11 | CERAMIC CHIP | 0.22uF | 10% | 16V |
| C406 | 1-126-960-11 | ELECT | 1uF | 20% | 50V |
| C407 | 1-126-960-11 | ELECT | 1uF | 20% | 50V |
| C410 | 1-162-923-11 | CERAMIC CHIP | 47PF | 5% | 50V |
| C411 | 1-162-923-11 | CERAMIC CHIP | 47PF | 5% | 50V |
| C412 | 1-126-934-11 | ELECT | 220uF | 20% | 16V |
| C413 | 1-162-970-11 | CERAMIC CHIP | 0.01uF | 10% | 25V |
| C431 | 1-126-964-11 | ELECT | 10uF | 20% | 50V |
| C432 | 1-165-908-11 | CERAMIC CHIP | 1uF | 10% | 10V |
| C435 | 1-165-908-11 | CERAMIC CHIP | 1uF | 10% | 10V |
| C441 | 1-126-964-11 | ELECT | 10uF | 20% | 50V |
| C442 | 1-165-908-11 | CERAMIC CHIP | 1uF | 10% | 10V |
| C445 | 1-165-908-11 | CERAMIC CHIP | 1uF | 10% | 10V |
| C451 | 1-126-964-11 | ELECT | 10uF | 20% | 50V |
| C452 | 1-165-908-11 | CERAMIC CHIP | 1uF | 10% | 10V |
| C455 | 1-165-908-11 | CERAMIC CHIP | 1uF | 10% | 10V |
| C461 | 1-126-964-11 | ELECT | 10uF | 20% | 50V |
| C462 | 1-165-908-11 | CERAMIC CHIP | 1uF | 10% | 10V |
| C465 | 1-165-908-11 | CERAMIC CHIP | 1uF | 10% | 10V |
| C471 | 1-126-964-11 | ELECT | 10uF | 20% | 50V |
| C474 | 1-163-251-11 | CERAMIC CHIP | 100PF | 5% | 50V |
| C479 | 1-126-947-11 | ELECT | 47uF | 20% | 35V |
| C481 | 1-126-964-11 | ELECT | 10uF | 20% | 50V |
| C484 | 1-163-251-11 | CERAMIC CHIP | 100PF | 5% | 50V |
| C501 | 1-162-970-11 | CERAMIC CHIP | 0.01uF | 10% | 25V |
| C502 | 1-162-964-11 | CERAMIC CHIP | 0.001uF | 10% | 50V |
| C503 | 1-104-665-11 | ELECT | 100uF | 20% | 25V |
| C504 | 1-162-970-11 | CERAMIC CHIP | 0.01uF | 10% | 25V |
| C507 | 1-162-917-11 | CERAMIC CHIP | 15PF | 5% | 50V |
| C508 | 1-162-917-11 | CERAMIC CHIP | 15PF | 5% | 50V |
| C509 | 1-162-966-11 | CERAMIC CHIP | 0.0022uF | 10% | 50V |
| C510 | 1-162-970-11 | CERAMIC CHIP | 0.01uF | 10% | 25V |
| C511 | 1-104-665-11 | ELECT | 100uF | 20% | 25V |
| C512 | 1-162-964-11 | CERAMIC CHIP | 0.001uF | 10% | 50V |
| C513 | 1-162-964-11 | CERAMIC CHIP | 0.001uF | 10% | 50V |
| C514 | 1-162-964-11 | CERAMIC CHIP | 0.001uF | 10% | 50V |
| C516 | 1-216-864-11 | SHORT CHIP | 0 | | |
| C519 | 1-107-826-11 | CERAMIC CHIP | 0.1uF | 10% | 16V |
| C601 | 1-131-868-81 | ELECT | 3300uF | 20% | 16V |
| C602 | 1-165-319-11 | CERAMIC CHIP | 0.1uF | | 50V |
| C617 | 1-163-009-11 | CERAMIC CHIP | 0.001uF | 10% | 50V |
| C618 | 1-163-009-11 | CERAMIC CHIP | 0.001uF | 10% | 50V |
| C622 | 1-126-916-11 | ELECT | 1000uF | 20% | 6.3V |
| C623 | 1-126-916-11 | ELECT | 1000uF | 20% | 6.3V |
| C631 | 1-126-960-11 | ELECT | 1uF | 20% | 50V |
| C750 | 1-115-340-11 | CERAMIC CHIP | 0.22uF | 10% | 25V |
| C751 | 1-115-340-11 | CERAMIC CHIP | 0.22uF | 10% | 25V |
| C753 | 1-128-551-11 | ELECT | 22uF | 20% | 63V |
| C754 | 1-126-961-11 | ELECT | 2.2uF | 20% | 50V |
| C755 | 1-162-964-11 | CERAMIC CHIP | 0.001uF | 10% | 50V |
| C756 | 1-127-715-11 | CERAMIC CHIP | 0.22uF | 10% | 16V |
| C758 | 1-126-964-11 | ELECT | 10uF | 20% | 50V |
| C763 | 1-127-715-11 | CERAMIC CHIP | 0.22uF | 10% | 16V |
| C764 | 1-115-340-11 | CERAMIC CHIP | 0.22uF | 10% | 25V |
| C765 | 1-115-340-11 | CERAMIC CHIP | 0.22uF | 10% | 25V |
| C769 | 1-127-715-11 | CERAMIC CHIP | 0.22uF | 10% | 16V |

| Ref. No. | Part No. | Description | | | Remark |
|---|---|---|---|---|---|
| C770 | 1-127-715-11 | CERAMIC CHIP | 0.22uF | 10% | 16V |
| C771 | 1-127-715-11 | CERAMIC CHIP | 0.22uF | 10% | 16V |
| C774 | 1-115-340-11 | CERAMIC CHIP | 0.22uF | 10% | 25V |
| C775 | 1-115-340-11 | CERAMIC CHIP | 0.22uF | 10% | 25V |
| C776 | 1-162-964-11 | CERAMIC CHIP | 0.001uF | 10% | 50V |
| C901 | 1-109-982-11 | CERAMIC CHIP | 1uF | 10% | 10V |
| C902 | 1-109-982-11 | CERAMIC CHIP | 1uF | 10% | 10V |
| C903 | 1-126-961-11 | ELECT | 2.2uF | 20% | 50V |
| C905 | 1-162-970-11 | CERAMIC CHIP | 0.01uF | 10% | 25V |
| C917 | 1-163-017-00 | CERAMIC CHIP | 0.0047uF | 10% | 50V |
| C918 | 1-163-017-00 | CERAMIC CHIP | 0.0047uF | 10% | 50V |
| | | < CONNECTOR > | | | |
| CN601 | 1-774-701-21 | PIN, CONNECTOR 16P | | | |
| CN701 | 1-819-773-13 | SOCKET, CONNECTOR 15P | | | |
| CNP301 | 1-817-536-11 | CONNECTOR, BOARD TO BOARD 28P | | | |
| | | < DIODE > | | | |
| D1 | 6-501-168-01 | DIODE | UDZW-TE17-5.6B | | |
| D479 | 6-501-193-01 | DIODE | 1SS355WTE-17 | | |
| D503 | 6-501-193-01 | DIODE | 1SS355WTE-17 | | |
| D580 | 6-501-171-01 | DIODE | UDZW-TE17-7.5B | | |
| D581 | 6-501-180-01 | DIODE | UDZW-TE17-18B | | |
| D601 | 8-719-049-38 | DIODE | 1N5404TU | | |
| D609 | 6-501-170-01 | DIODE | UDZW-TE17-6.8B | | |
| D617 | 6-501-180-01 | DIODE | UDZW-TE17-18B | | |
| D704 | 1-216-295-11 | SHORT CHIP | 0 | | |
| D719 | 6-501-180-01 | DIODE | UDZW-TE17-18B | | |
| D751 | 6-500-522-01 | DIODE | 10EDB40-TA1B2 | | |
| D752 | 6-500-522-01 | DIODE | 10EDB40-TA1B2 | | |
| D753 | 6-500-522-01 | DIODE | 10EDB40-TA1B2 | | |
| D754 | 6-500-522-01 | DIODE | 10EDB40-TA1B2 | | |
| D755 | 6-500-522-01 | DIODE | 10EDB40-TA1B2 | | |
| D756 | 6-500-522-01 | DIODE | 10EDB40-TA1B2 | | |
| D757 | 6-500-522-01 | DIODE | 10EDB40-TA1B2 | | |
| D758 | 6-500-522-01 | DIODE | 10EDB40-TA1B2 | | |
| D759 | 6-500-522-01 | DIODE | 10EDB40-TA1B2 | | |
| D760 | 6-500-522-01 | DIODE | 10EDB40-TA1B2 | | |
| D761 | 6-500-522-01 | DIODE | 10EDB40-TA1B2 | | |
| D762 | 6-500-522-01 | DIODE | 10EDB40-TA1B2 | | |
| D903 | 6-501-170-01 | DIODE | UDZW-TE17-6.8B | | |
| | | < FERRITE BEAD > | | | |
| FB1 | 1-500-245-11 | INDUCTOR, FERRITE BEAD | | | |
| FB301 | 1-216-864-11 | SHORT CHIP | 0 | | |
| FB302 | 1-216-864-11 | SHORT CHIP | 0 | | |
| FB303 | 1-216-864-11 | SHORT CHIP | 0 | | |
| FB304 | 1-216-295-11 | SHORT CHIP | 0 | | |
| FB305 | 1-216-295-11 | SHORT CHIP | 0 | | |
| FB306 | 1-216-295-11 | SHORT CHIP | 0 | | |
| FB307 | 1-216-864-11 | SHORT CHIP | 0 | | |
| FB310 | 1-216-864-11 | SHORT CHIP | 0 | | |
| FB311 | 1-216-864-11 | SHORT CHIP | 0 | | |
| FB410 | 1-216-864-11 | SHORT CHIP | 0 | | |
| FB411 | 1-216-864-11 | SHORT CHIP | 0 | | |
| FB501 | 1-216-295-11 | SHORT CHIP | 0 | | |
| FB603 | 1-216-295-11 | SHORT CHIP | 0 | | |
| FB604 | 1-500-245-11 | INDUCTOR, FERRITE BEAD | | | |

| Ref. No. | Part No. | Description | | | Remark |
|---|---|---|---|---|---|
| FB605 | 1-216-864-11 | SHORT CHIP | 0 | | |
| FB606 | 1-216-864-11 | SHORT CHIP | 0 | | |
| | | < FUSE > | | | |
| FU601 | 1-532-877-11 | FUSE (BLADE TYPE) (AUTO FUSE) 10A | | | |
| | | < IC > | | | |
| IC401 | 6-708-880-01 | IC | BD3806AFS-E2 | | |
| IC501 | 6-806-757-01 | IC | MB90488BPF-G-186-AE1 | | |
| IC602 | 8-759-659-13 | IC | PST3428UL | | |
| IC750 | 6-705-363-02 | IC | TDA8589BJ/N2/R1 | | |
| IC901 | 8-759-681-42 | IC | NJM12902V(TE2) | | |
| | | < JACK > | | | |
| J1 | 1-815-185-13 | JACK (ANTENNA) | | | |
| J330 | 1-774-698-11 | JACK, PIN 2P (AUDIO OUT REAR L/R) | | | |
| | | < JUMPER RESISTOR > | | | |
| JC1 | 1-216-864-11 | SHORT CHIP | 0 | | |
| JC501 | 1-216-864-11 | SHORT CHIP | 0 | | |
| JC504 | 1-216-864-11 | SHORT CHIP | 0 | | |
| JC534 | 1-216-864-11 | SHORT CHIP | 0 | | |
| JC536 | 1-216-864-11 | SHORT CHIP | 0 | | |
| JC681 | 1-216-864-11 | SHORT CHIP | 0 | | |
| JC753 | 1-216-296-11 | SHORT CHIP | 0 | | |
| JC754 | 1-216-296-11 | SHORT CHIP | 0 | | |
| JC755 | 1-216-296-11 | SHORT CHIP | 0 | | |
| JC756 | 1-216-864-11 | SHORT CHIP | 0 | | |
| JC795 | 1-216-864-11 | SHORT CHIP | 0 | | |
| | | < COIL > | | | |
| L1 | 1-469-844-11 | INDUCTOR | 2.2uH | | |
| L301 | 1-216-295-11 | SHORT CHIP | 0 | | |
| L501 | 1-216-295-11 | SHORT CHIP | 0 | | |
| L601 | 1-456-617-11 | COIL, CHOKE | | | |
| | | < TRANSISTOR > | | | |
| Q1 | 6-551-431-01 | TRANSISTOR | 2SC6027T100-QR | | |
| Q431 | 8-729-027-44 | TRANSISTOR | DTC114TKA-T146 | | |
| Q441 | 8-729-027-44 | TRANSISTOR | DTC114TKA-T146 | | |
| Q451 | 8-729-027-44 | TRANSISTOR | DTC114TKA-T146 | | |
| Q461 | 8-729-027-44 | TRANSISTOR | DTC114TKA-T146 | | |
| Q471 | 6-551-392-01 | TRANSISTOR | RT6N140C-TP-1 | | |
| Q478 | 1-801-806-11 | TRANSISTOR | DTC144EKA | | |
| Q479 | 8-729-027-23 | TRANSISTOR | DTA114EKA-T146 | | |
| Q481 | 6-551-392-01 | TRANSISTOR | RT6N140C-TP-1 | | |
| Q580 | 8-729-027-43 | TRANSISTOR | DTC114EKA-T146 | | |
| Q581 | 1-801-806-11 | TRANSISTOR | DTC144EKA | | |
| Q582 | 8-729-120-28 | TRANSISTOR | 2SC1623-L5L6 | | |
| Q631 | 8-729-120-28 | TRANSISTOR | 2SC1623-L5L6 | | |
| Q664 | 8-729-027-23 | TRANSISTOR | DTA114EKA-T146 | | |
| | | < RESISTOR > | | | |
| R1 | 1-216-821-11 | METAL CHIP | 1K | 5% | 1/10W |
| R2 | 1-414-595-11 | INDUCTOR, FERRITE BEAD | | | |
| R3 | 1-414-595-11 | INDUCTOR, FERRITE BEAD | | | |
| R4 | 1-216-839-11 | METAL CHIP | 33K | 5% | 1/10W |
| R5 | 1-216-843-11 | METAL CHIP | 68K | 5% | 1/10W |

**MAIN**

| Ref. No. | Part No. | Description | | | Remark |
|---|---|---|---|---|---|
| R12 | 1-414-595-11 | INDUCTOR, FERRITE BEAD | | | |
| R13 | 1-414-595-11 | INDUCTOR, FERRITE BEAD | | | |
| R301 | 1-216-821-11 | METAL CHIP | 1K | 5% | 1/10W |
| R302 | 1-216-821-11 | METAL CHIP | 1K | 5% | 1/10W |
| R401 | 1-216-797-11 | METAL CHIP | 10 | 5% | 1/10W |
| R405 | 1-218-881-11 | METAL CHIP | 27K | 0.5% | 1/10W |
| R406 | 1-216-809-11 | METAL CHIP | 100 | 5% | 1/10W |
| R407 | 1-216-809-11 | METAL CHIP | 100 | 5% | 1/10W |
| R408 | 1-216-809-11 | METAL CHIP | 100 | 5% | 1/10W |
| R409 | 1-216-809-11 | METAL CHIP | 100 | 5% | 1/10W |
| R410 | 1-216-809-11 | METAL CHIP | 100 | 5% | 1/10W |
| R411 | 1-216-809-11 | METAL CHIP | 100 | 5% | 1/10W |
| R431 | 1-216-821-11 | METAL CHIP | 1K | 5% | 1/10W |
| R432 | 1-216-833-11 | METAL CHIP | 10K | 5% | 1/10W |
| R441 | 1-216-821-11 | METAL CHIP | 1K | 5% | 1/10W |
| R442 | 1-216-833-11 | METAL CHIP | 10K | 5% | 1/10W |
| R451 | 1-216-821-11 | METAL CHIP | 1K | 5% | 1/10W |
| R452 | 1-216-833-11 | METAL CHIP | 10K | 5% | 1/10W |
| R461 | 1-216-821-11 | METAL CHIP | 1K | 5% | 1/10W |
| R462 | 1-216-833-11 | METAL CHIP | 10K | 5% | 1/10W |
| R471 | 1-216-809-11 | METAL CHIP | 100 | 5% | 1/10W |
| R472 | 1-216-833-11 | METAL CHIP | 10K | 5% | 1/10W |
| R479 | 1-216-805-11 | METAL CHIP | 47 | 5% | 1/10W |
| R481 | 1-216-809-11 | METAL CHIP | 100 | 5% | 1/10W |
| R482 | 1-216-833-11 | METAL CHIP | 10K | 5% | 1/10W |
| R502 | 1-216-821-11 | METAL CHIP | 1K | 5% | 1/10W |
| R503 | 1-216-821-11 | METAL CHIP | 1K | 5% | 1/10W |
| R504 | 1-218-871-11 | METAL CHIP | 10K | 0.5% | 1/10W |
| R505 | 1-218-871-11 | METAL CHIP | 10K | 0.5% | 1/10W |
| R507 | 1-216-845-11 | METAL CHIP | 100K | 5% | 1/10W |
| R508 | 1-216-864-11 | SHORT CHIP | 0 | | |
| R509 | 1-216-812-11 | METAL CHIP | 180 | 5% | 1/10W |
| R510 | 1-216-821-11 | METAL CHIP | 1K | 5% | 1/10W |
| R511 | 1-216-821-11 | METAL CHIP | 1K | 5% | 1/10W |
| R512 | 1-216-821-11 | METAL CHIP | 1K | 5% | 1/10W |
| R513 | 1-216-845-11 | METAL CHIP | 100K | 5% | 1/10W |
| R514 | 1-216-845-11 | METAL CHIP | 100K | 5% | 1/10W |
| R515 | 1-247-807-31 | CARBON | 100 | 5% | 1/4W |
| R516 | 1-247-807-31 | CARBON | 100 | 5% | 1/4W |
| R517 | 1-216-841-11 | METAL CHIP | 47K | 5% | 1/10W |
| R518 | 1-216-825-11 | METAL CHIP | 2.2K | 5% | 1/10W |
| R519 | 1-216-845-11 | METAL CHIP | 100K | 5% | 1/10W |
| R521 | 1-216-825-11 | METAL CHIP | 2.2K | 5% | 1/10W |
| R522 | 1-216-825-11 | METAL CHIP | 2.2K | 5% | 1/10W |
| R523 | 1-216-821-11 | METAL CHIP | 1K | 5% | 1/10W |
| R524 | 1-216-821-11 | METAL CHIP | 1K | 5% | 1/10W |
| R525 | 1-216-821-11 | METAL CHIP | 1K | 5% | 1/10W |
| R526 | 1-216-809-11 | METAL CHIP | 100 | 5% | 1/10W |
| R527 | 1-216-821-11 | METAL CHIP | 1K | 5% | 1/10W |
| R528 | 1-216-845-11 | METAL CHIP | 100K | 5% | 1/10W |
| R529 | 1-216-821-11 | METAL CHIP | 1K | 5% | 1/10W |
| R530 | 1-216-845-11 | METAL CHIP | 100K | 5% | 1/10W |
| R531 | 1-216-845-11 | METAL CHIP | 100K | 5% | 1/10W |
| R532 | 1-216-845-11 | METAL CHIP | 100K | 5% | 1/10W |
| R533 | 1-216-845-11 | METAL CHIP | 100K | 5% | 1/10W |
| R534 | 1-216-833-11 | METAL CHIP | 10K | 5% | 1/10W |
| R535 | 1-216-845-11 | METAL CHIP | 100K | 5% | 1/10W |
| R536 | 1-216-845-11 | METAL CHIP | 100K | 5% | 1/10W |
| R538 | 1-216-845-11 | METAL CHIP | 100K | 5% | 1/10W |
| R539 | 1-216-864-11 | SHORT CHIP | 0 | | |
| R540 | 1-216-845-11 | METAL CHIP | 100K | 5% | 1/10W |
| R541 | 1-216-845-11 | METAL CHIP | 100K | 5% | 1/10W |
| R543 | 1-216-821-11 | METAL CHIP | 1K | 5% | 1/10W |
| R544 | 1-216-821-11 | METAL CHIP | 1K | 5% | 1/10W |
| R550 | 1-216-845-11 | METAL CHIP | 100K | 5% | 1/10W |
| R551 | 1-216-845-11 | METAL CHIP | 100K | 5% | 1/10W |
| R556 | 1-216-833-11 | METAL CHIP | 10K | 5% | 1/10W |
| R557 | 1-216-809-11 | METAL CHIP | 100 | 5% | 1/10W |
| R558 | 1-216-821-11 | METAL CHIP | 1K | 5% | 1/10W |
| R559 | 1-216-845-11 | METAL CHIP | 100K | 5% | 1/10W |
| R560 | 1-216-845-11 | METAL CHIP | 100K | 5% | 1/10W |
| R561 | 1-216-845-11 | METAL CHIP | 100K | 5% | 1/10W |
| R563 | 1-216-845-11 | METAL CHIP | 100K | 5% | 1/10W |
| R565 | 1-216-845-11 | METAL CHIP | 100K | 5% | 1/10W |
| R566 | 1-216-845-11 | METAL CHIP | 100K | 5% | 1/10W |
| R567 | 1-216-845-11 | METAL CHIP | 100K | 5% | 1/10W |
| R568 | 1-216-821-11 | METAL CHIP | 1K | 5% | 1/10W |
| R570 | 1-216-817-11 | METAL CHIP | 470 | 5% | 1/10W |
| R571 | 1-216-845-11 | METAL CHIP | 100K | 5% | 1/10W |
| R572 | 1-216-809-11 | METAL CHIP | 100 | 5% | 1/10W |
| R575 | 1-216-845-11 | METAL CHIP | 100K | 5% | 1/10W |
| R577 | 1-216-845-11 | METAL CHIP | 100K | 5% | 1/10W |
| R582 | 1-216-821-11 | METAL CHIP | 1K | 5% | 1/10W |
| R583 | 1-216-821-11 | METAL CHIP | 1K | 5% | 1/10W |
| R584 | 1-216-841-11 | METAL CHIP | 47K | 5% | 1/10W |
| R585 | 1-216-849-11 | METAL CHIP | 220K | 5% | 1/10W |
| R601 | 1-216-845-11 | METAL CHIP | 100K | 5% | 1/10W |
| R609 | 1-216-821-11 | METAL CHIP | 1K | 5% | 1/10W |
| R631 | 1-249-425-11 | CARBON | 4.7K | 5% | 1/4W |
| R632 | 1-216-841-11 | METAL CHIP | 47K | 5% | 1/10W |
| R633 | 1-216-841-11 | METAL CHIP | 47K | 5% | 1/10W |
| R634 | 1-216-829-11 | METAL CHIP | 4.7K | 5% | 1/10W |
| R636 | 1-216-845-11 | METAL CHIP | 100K | 5% | 1/10W |
| R661 | 1-216-821-11 | METAL CHIP | 1K | 5% | 1/10W |
| R662 | 1-216-845-11 | METAL CHIP | 100K | 5% | 1/10W |
| R663 | 1-216-821-11 | METAL CHIP | 1K | 5% | 1/10W |
| R664 | 1-216-845-11 | METAL CHIP | 100K | 5% | 1/10W |
| R671 | 1-216-809-11 | METAL CHIP | 100 | 5% | 1/10W |
| R672 | 1-216-809-11 | METAL CHIP | 100 | 5% | 1/10W |
| R673 | 1-216-833-11 | METAL CHIP | 10K | 5% | 1/10W |
| R674 | 1-216-845-11 | METAL CHIP | 100K | 5% | 1/10W |
| R675 | 1-216-821-11 | METAL CHIP | 1K | 5% | 1/10W |
| R676 | 1-216-821-11 | METAL CHIP | 1K | 5% | 1/10W |
| R677 | 1-216-864-11 | SHORT CHIP | 0 | | |
| R680 | 1-216-821-11 | METAL CHIP | 1K | 5% | 1/10W |
| R681 | 1-216-821-11 | METAL CHIP | 1K | 5% | 1/10W |
| R752 | 1-216-811-11 | METAL CHIP | 150 | 5% | 1/10W |
| R756 | 1-216-841-11 | METAL CHIP | 47K | 5% | 1/10W |
| R757 | 1-216-864-11 | SHORT CHIP | 0 | | |
| R901 | 1-216-817-11 | METAL CHIP | 470 | 5% | 1/10W |
| R902 | 1-216-817-11 | METAL CHIP | 470 | 5% | 1/10W |
| R903 | 1-216-834-11 | METAL CHIP | 12K | 5% | 1/10W |
| R904 | 1-216-834-11 | METAL CHIP | 12K | 5% | 1/10W |
| R905 | 1-216-841-11 | METAL CHIP | 47K | 5% | 1/10W |
| R906 | 1-216-841-11 | METAL CHIP | 47K | 5% | 1/10W |
| R907 | 1-216-845-11 | METAL CHIP | 100K | 5% | 1/10W |

| Ref. No. | Part No. | Description | | | Remark |
|---|---|---|---|---|---|
| R910 | 1-216-789-11 | METAL CHIP | 2.2 | 5% | 1/10W |
| R911 | 1-216-825-11 | METAL CHIP | 2.2K | 5% | 1/10W |
| R912 | 1-216-864-11 | SHORT CHIP | 0 | | |
| R913 | 1-216-864-11 | SHORT CHIP | 0 | | |
| R914 | 1-216-825-11 | METAL CHIP | 2.2K | 5% | 1/10W |
| | | < SWITCH > | | | |
| S702 | 1-786-826-11 | SWITCH, TACTILE (RESET) | | | |
| | | < TUNER UNIT > | | | |
| TU1 | A-3220-961-B | TUNER UNIT (TUX-032) | | | |
| | | < VIBRATOR > | | | |
| X501 | 1-813-524-21 | VIBRATOR, CERAMIC (18.432MHz) | | | |
| X502 | 1-813-202-11 | VIBRATOR, CRYSTAL (32.768kHz) | | | |

**********

SENSOR BOARD
**********

< SWITCH >

| | | | | | |
|---|---|---|---|---|---|
| SW2 | 1-529-566-61 | SWITCH, PUSH (1 KEY) (SELF) | | | |
| SW3 | 1-529-566-61 | SWITCH, PUSH (1 KEY) (DISC IN) | | | |

**********

| | | | | | |
|---|---|---|---|---|---|
| | A-1083-497-A | SERVO BOARD, COMPLETE | | | |
| | | ********** | | | |
| | | < CAPACITOR > | | | |
| C1 | 1-107-826-11 | CERAMIC CHIP | 0.1uF | 10% | 16V |
| C2 | 1-162-970-11 | CERAMIC CHIP | 0.01uF | 10% | 25V |
| C5 | 1-107-826-11 | CERAMIC CHIP | 0.1uF | 10% | 16V |
| C6 | 1-100-381-11 | ELECT CHIP | 10uF | 20% | 16V |
| C7 | 1-107-826-11 | CERAMIC CHIP | 0.1uF | 10% | 16V |
| C11 | 1-107-826-11 | CERAMIC CHIP | 0.1uF | 10% | 16V |
| C13 | 1-107-826-11 | CERAMIC CHIP | 0.1uF | 10% | 16V |
| C17 | 1-107-826-11 | CERAMIC CHIP | 0.1uF | 10% | 16V |
| C18 | 1-162-970-11 | CERAMIC CHIP | 0.01uF | 10% | 25V |
| C19 | 1-107-826-11 | CERAMIC CHIP | 0.1uF | 10% | 16V |
| C20 | 1-107-826-11 | CERAMIC CHIP | 0.1uF | 10% | 16V |
| C21 | 1-162-970-11 | CERAMIC CHIP | 0.01uF | 10% | 25V |
| C23 | 1-162-923-11 | CERAMIC CHIP | 47PF | 5% | 50V |
| C25 | 1-162-908-11 | CERAMIC CHIP | 3PF | 0.25PF | 50V |
| C26 | 1-107-826-11 | CERAMIC CHIP | 0.1uF | 10% | 16V |
| C27 | 1-107-826-11 | CERAMIC CHIP | 0.1uF | 10% | 16V |
| C28 | 1-107-826-11 | CERAMIC CHIP | 0.1uF | 10% | 16V |
| C29 | 1-107-826-11 | CERAMIC CHIP | 0.1uF | 10% | 16V |
| C30 | 1-162-921-11 | CERAMIC CHIP | 33PF | 5% | 50V |
| C31 | 1-162-925-11 | CERAMIC CHIP | 68PF | 5% | 50V |
| C32 | 1-107-826-11 | CERAMIC CHIP | 0.1uF | 10% | 16V |
| C34 | 1-107-826-11 | CERAMIC CHIP | 0.1uF | 10% | 16V |
| C35 | 1-107-826-11 | CERAMIC CHIP | 0.1uF | 10% | 16V |
| C36 | 1-162-967-11 | CERAMIC CHIP | 0.0033uF | 10% | 50V |
| C37 | 1-162-970-11 | CERAMIC CHIP | 0.01uF | 10% | 25V |
| C38 | 1-104-609-11 | ELECT CHIP | 100uF | 20% | 4V |
| C39 | 1-107-826-11 | CERAMIC CHIP | 0.1uF | 10% | 16V |
| C70 | 1-162-965-11 | CERAMIC CHIP | 0.0015uF | 10% | 50V |
| C71 | 1-162-965-11 | CERAMIC CHIP | 0.0015uF | 10% | 50V |
| C72 | 1-162-962-11 | CERAMIC CHIP | 470PF | 10% | 50V |
| C73 | 1-162-962-11 | CERAMIC CHIP | 470PF | 10% | 50V |
| C74 | 1-107-826-11 | CERAMIC CHIP | 0.1uF | 10% | 16V |
| C75 | 1-107-826-11 | CERAMIC CHIP | 0.1uF | 10% | 16V |
| C76 | 1-162-970-11 | CERAMIC CHIP | 0.01uF | 10% | 25V |
| C77 | 1-162-970-11 | CERAMIC CHIP | 0.01uF | 10% | 25V |
| C78 | 1-164-227-11 | CERAMIC CHIP | 0.022uF | 10% | 25V |
| C79 | 1-164-227-11 | CERAMIC CHIP | 0.022uF | 10% | 25V |
| | | < CONNECTOR > | | | |
| CN1 | 1-817-275-21 | CONNECTOR, BOARD TO BOARD 28P | | | |
| CN2 | 1-815-016-61 | CONNECTOR, FFC/FPC (ZIF) 16P | | | |
| | | < FERRITE BEAD > | | | |
| FB1 | 1-216-864-11 | SHORT CHIP | 0 | | |
| FB2 | 1-414-760-21 | FERRITE, EMI (SMD) (1608) | | | |
| FB3 | 1-414-760-21 | FERRITE, EMI (SMD) (1608) | | | |
| | | < IC > | | | |
| IC1 | 6-703-699-01 | IC uPD63712GC-8EU-A | | | |
| IC2 | 6-705-002-01 | IC BA5966FP-FE2 | | | |
| | | < FERRITE BEAD > | | | |
| JR40 | 1-414-760-21 | FERRITE, EMI (SMD) (1608) | | | |
| JR41 | 1-414-760-21 | FERRITE, EMI (SMD) (1608) | | | |
| JR90 | 1-414-760-21 | FERRITE, EMI (SMD) (1608) | | | |
| JR91 | 1-414-760-21 | FERRITE, EMI (SMD) (1608) | | | |
| | | < TRANSISTOR > | | | |
| Q1 | 8-729-904-87 | TRANSISTOR 2SB1197K-T-146-R | | | |
| | | < RESISTOR > | | | |
| R1 | 1-216-841-11 | METAL CHIP | 47K | 5% | 1/10W |
| R2 | 1-216-809-11 | METAL CHIP | 100 | 5% | 1/10W |
| R3 | 1-216-809-11 | METAL CHIP | 100 | 5% | 1/10W |
| R4 | 1-216-809-11 | METAL CHIP | 100 | 5% | 1/10W |
| R5 | 1-216-809-11 | METAL CHIP | 100 | 5% | 1/10W |
| R6 | 1-216-833-11 | METAL CHIP | 10K | 5% | 1/10W |
| R7 | 1-216-840-11 | METAL CHIP | 39K | 5% | 1/10W |
| R8 | 1-414-760-21 | FERRITE, EMI (SMD) (1608) | | | |
| R9 | 1-216-822-11 | METAL CHIP | 1.2K | 5% | 1/10W |
| R10 | 1-414-760-21 | FERRITE, EMI (SMD) (1608) | | | |
| R11 | 1-216-833-11 | METAL CHIP | 10K | 5% | 1/10W |
| R12 | 1-216-809-11 | METAL CHIP | 100 | 5% | 1/10W |
| R13 | 1-216-833-11 | METAL CHIP | 10K | 5% | 1/10W |
| R14 | 1-216-797-11 | METAL CHIP | 10 | 5% | 1/10W |
| R15 | 1-216-797-11 | METAL CHIP | 10 | 5% | 1/10W |
| R41 | 1-216-821-11 | METAL CHIP | 1K | 5% | 1/10W |
| R42 | 1-216-821-11 | METAL CHIP | 1K | 5% | 1/10W |
| R44 | 1-414-760-21 | FERRITE, EMI (SMD) (1608) | | | |
| R45 | 1-414-760-21 | FERRITE, EMI (SMD) (1608) | | | |
| R70 | 1-216-842-11 | METAL CHIP | 56K | 5% | 1/10W |
| R71 | 1-216-833-11 | METAL CHIP | 10K | 5% | 1/10W |
| R72 | 1-216-842-11 | METAL CHIP | 56K | 5% | 1/10W |
| R73 | 1-216-833-11 | METAL CHIP | 10K | 5% | 1/10W |
| R74 | 1-216-837-11 | METAL CHIP | 22K | 5% | 1/10W |
| R75 | 1-216-833-11 | METAL CHIP | 10K | 5% | 1/10W |
| R76 | 1-216-837-11 | METAL CHIP | 22K | 5% | 1/10W |

**SERVO**

| Ref. No. | Part No. | Description | | | Remark |
|---|---|---|---|---|---|
| R77 | 1-216-833-11 | METAL CHIP | 10K | 5% | 1/10W |
| R78 | 1-216-833-11 | METAL CHIP | 10K | 5% | 1/10W |
| R79 | 1-216-833-11 | METAL CHIP | 10K | 5% | 1/10W |
| R80 | 1-216-833-11 | METAL CHIP | 10K | 5% | 1/10W |
| R81 | 1-216-833-11 | METAL CHIP | 10K | 5% | 1/10W |
| R82 | 1-216-837-11 | METAL CHIP | 22K | 5% | 1/10W |
| R83 | 1-216-833-11 | METAL CHIP | 10K | 5% | 1/10W |
| R84 | 1-216-837-11 | METAL CHIP | 22K | 5% | 1/10W |
| R85 | 1-216-833-11 | METAL CHIP | 10K | 5% | 1/10W |
| | | < SWITCH > | | | |
| SW1 | 1-529-565-61 | SWITCH, PUSH (1 KEY) (DOWN) | | | |
| | | < VIBRATOR > | | | |
| X1 | 1-795-562-21 | VIBRATOR, CERAMIC (16.9344MHz) | | | |

**********

MISCELLANEOUS
**********

| | | |
|---|---|---|
| 57 | 1-780-199-11 | CONDUCTIVE BOARD, CONNECTION |
| ⚠153 | 8-820-207-12 | OPTICAL PICK-UP (KSS1000E/K1RP) |
| 154 | A-1088-615-A | CHASSIS (OP) SUB ASSY (including M901) |
| LCD901 | 1-805-920-11 | DISPLAY PANEL, LIQUID CRYSTAL |
| M902 | A-1088-614-A | MOTOR ASSY, SL (SLED) |
| M903 | A-1088-622-A | MOTOR ASSY, LE (LOADING) |
| RE901 | 1-478-474-12 | ENCODER, ROTARY (PUSH SELECT/VOLUME) |
| SW4 | 1-786-339-11 | SWITCH (M) (LIMIT) |

**********

ACCESSORIES
**********

| | |
|---|---|
| 1-826-514-11 | SPEAKER (6X9 in.) |
| 1-826-515-11 | SPEAKER (6 1/2 in.) |
| 2-886-097-11 | MANUAL, INSTRUCTION (ENGLISH,SPANISH) (CDX-GT06) |
| 2-886-098-11 | MANUAL, INSTRUCTION, INSTALL (ENGLISH, SPANISH) (CXS-GT06HP) |

**********

| Ref. No. | Part No. | Description | Remark |
|---|---|---|---|
| | | PARTS FOR INSTALLATION AND CONNECTIONS | |
| | | ********** | |
| 301 | X-3382-647-1 | FRAME ASSY, FITTING | |
| 302 | 2-187-743-02 | COLLAR | |
| 303 | 3-246-011-01 | KEY (FRAME) | |
| 304 | 3-259-776-01 | SCREW (+K 5X8 TP) | |
| 305 | 1-776-206-21 | CORD (WITH CONNECTOR) (POWER) | |
| 306 | 2-886-394-01 | TEMPLATE (for 6X9 in.) | |
| 307 | 2-886-389-01 | TEMPLATE (for 6 1/2 in.) | |
| 308 | 2-886-393-01 | GRILLE (for 6X9 in.) | |
| 309 | 2-886-388-01 | GRILLE (for 6 1/2 in.) | |
| 310 | 1-824-847-11 | CORD, SPEAKER CONNECTION (0.3m) | |
| 311 | 3-240-189-11 | SCREW, SPECIAL | |
| 312 | 2-585-058-01 | NUT, SPEED | |

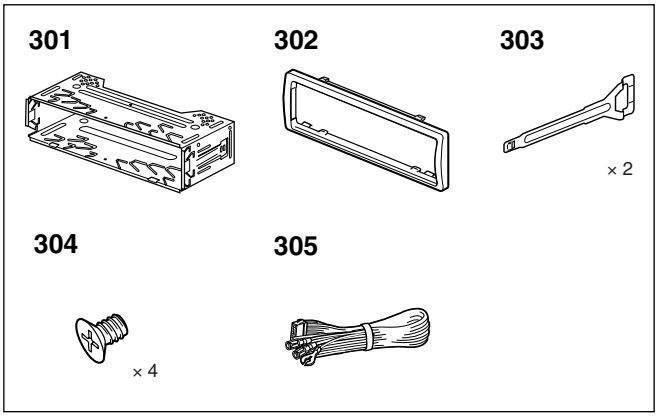


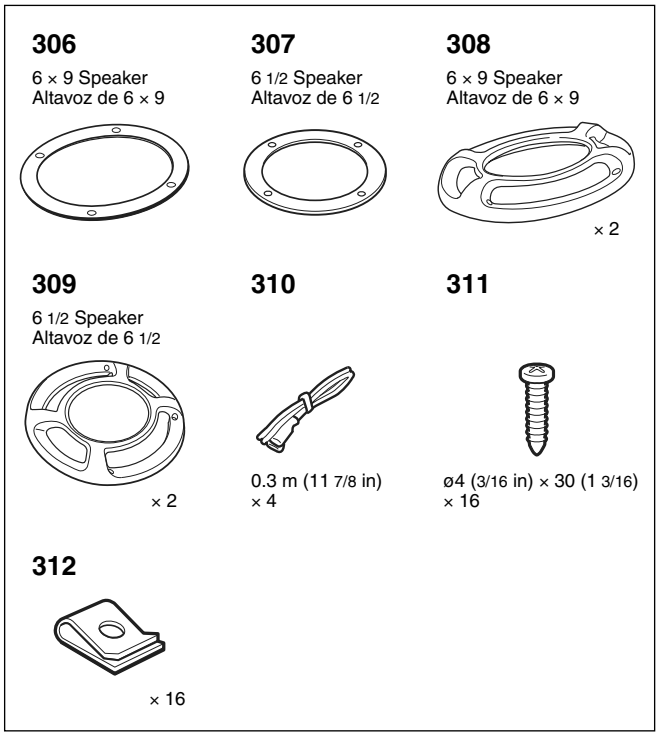

*MEMO*

## REVISION HISTORY

Clicking the version allows you to jump to the revised page.
Also, clicking the version at the upper on the revised page allows you to jump to the next revised page.

| Ver. | Date | Description of Revision |
|---|---|---|
| 1.0 | 2006.07 | New |
| | | |
| | | |
| | | |
| | | |
| | | |
| | | |
| | | |
| | | |
| | | |
| | | |
| | | |
| | | |
| | | |
| | | |
| | | |
| | | |
| | | |
| | | |
| | | |
| | | |
| | | |
| | | |
| | | |
| | | |
| | | |
| | | |
| | | |
| | | |
| | | |
| | | |
| | | |
| | | |
| | | |
| | | |